UNCLASSIFIED

TM 9-374

WAR DEPARTMENT TECHNICAL MANUAL

90-MM GUN M3 MOUNTED IN COMBAT VEHICLES

REGRADED UNCLASSIFIED BY
AUTHORITY OF DOD DIR. 5200. 1 R
BY RAWS ON 11/12/04

PROPERTY OF U. S.

RESTRICTED DISSEMINATION OF RESTRICTED MATTER—
The information contained in restricted documents and the essential characteristics of restricted material may be given to any person known to be in the service of the United States and to persons of undoubted loyalty and discretion who are cooperating in Government work, but will not be communicated to the public or to the press except by authorized military public relations agencies. (See also paragraph 23b, AR 380-5, 15 March 1944.

TRUCK LIBRARY

WAR DEPARTMENT • 11 SEPTEMBER 1944

UNCLASSIFIED

WAR DEPARTMENT TECHNICAL MANUAL

TM 9-374

90-MM GUN M3 MOUNTED IN COMBAT VEHICLES

WAR DEPARTMENT • *11 SEPTEMBER 1944*

RESTRICTED *DISSEMINATION OF RESTRICTED MATTER*—The information contained in restricted documents and the essential characteristics of restricted material may be given to any person known to be in the service of the United States and to persons of undoubted loyalty and discretion who are cooperating in Government work, but will not be communicated to the public or to the press except by authorized military public relations agencies. (See also paragraph 23*b*, AR 380-5, 15 March 1944.)

WAR DEPARTMENT
Washington 25, D. C., 11 September 1944

TM 9-374, 90-mm Gun M3 Mounted in Combat Vehicles, is published for the information and guidance of all concerned.

[A.G. 300.7 (13 Sep 44)
O.O. 461/58719 Misc.]

BY ORDER OF THE SECRETARY OF WAR:

G. C. MARSHALL,
Chief of Staff.

OFFICIAL:
J. A. ULIO,
Major General,
The Adjutant General.

DISTRIBUTION: Armies (10); Corps (10); SvC (10); Depts (10); D (2); IBn 9 (2); IC 9 (3); C & H 17 & 18 (2); Tech Sv (2); Arm & Sv Boards (2); Posts, Camps & Stas (1); Gen & Sp Sv Sch (10); Ord Decentralized Sub-O (3); Ord Dist O (5); Ord Regional O (3); PE (Mark for Ord O) (5); H & R Points (5); Ord Dist Br O (3); Ord Estab (5).

IBn 9—T/O & E 9-65; 9-76.

IC 9—T/O & E 9-7; 9-9; 9-57; 9-67; 9-318; 9-377.

(For explanation of symbols, see FM 21-6.)

CONTENTS

PART ONE — INTRODUCTION

		Paragraphs	Pages
SECTION	I. General	1– 2	1– 4
	II. Description and data	3– 6	4–12
	III. Tools, parts, and accessories	7– 8	13–15

PART TWO — OPERATING INSTRUCTIONS

SECTION	IV. General	9	16
	V. Service upon receipt of materiel	10–12	16–17
	VI. Controls and instruments	13–17	18–21
	VII. Operation under usual conditions	18–21	21–32
	VIII. Operation under unusual conditions	22–26	33
	IX. Demolition to prevent enemy use	27–29	34

PART THREE — MAINTENANCE INSTRUCTIONS

SECTION	X. General	30–31	35
	XI. Lubrication	32–35	36–43
	XII. Preventive maintenance service	36–38	43–48
	XIII. Malfunctions and corrections	39–41	48–50
	XIV. Breech mechanism	42–52	50–62
	XV. Closing spring cylinder	53	62–64
	XVI. Percussion mechanism	54–59	64–71
	XVII. Gun recoil guard	60	71–72
	XVIII. Firing mechanism	61	72–77
	XIX. Breech operating mechanism	62	77
	XX. Firing switch box and firing trigger	63–64	77–80
	XXI. Recoil cylinders	65	80–84

PART FOUR — AUXILIARY EQUIPMENT

SECTION	XXII. General	66	85
	XXIII. Ammunition	67–75	85–96
	XXIV. Sighting and fire control equipment	76–87	97–123

APPENDIX

SECTION	XXV. Shipment and storage	88–89	124–126
	XXVI. References	90–92	127–129

INDEX 130–132

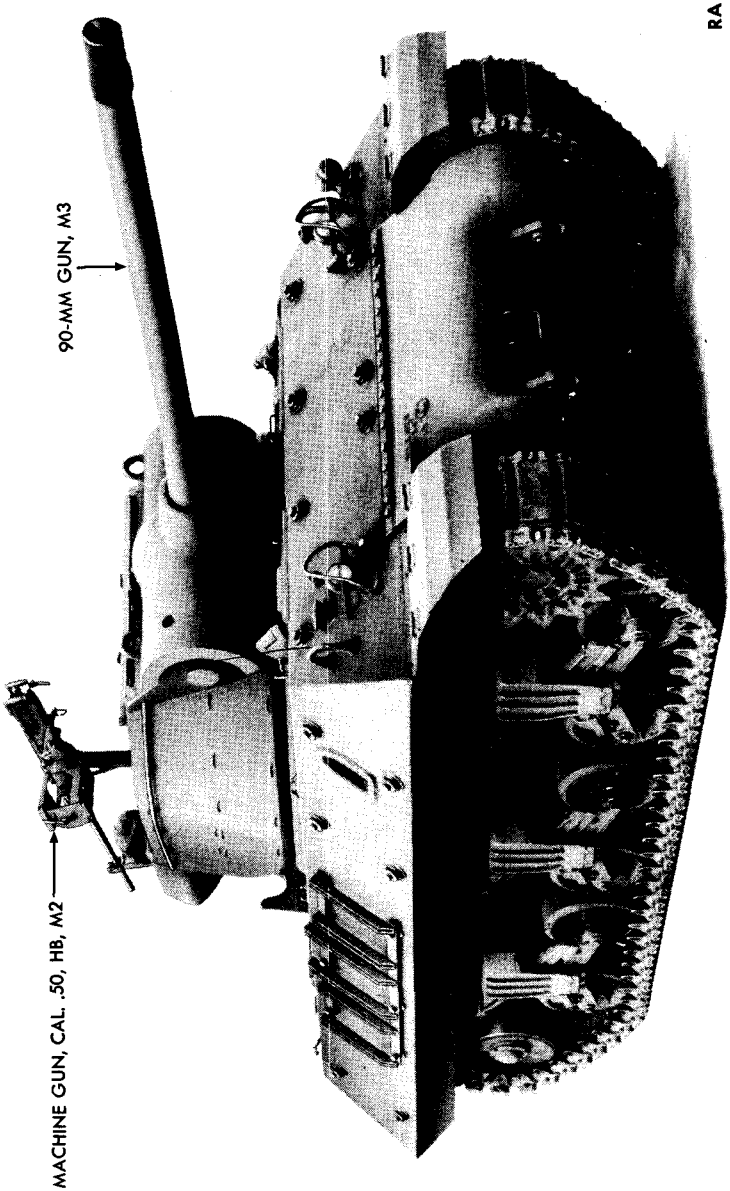

RA PD 76378

Figure 1 — 90-mm Gun Motor Carriage T71 (M36) — Three-quarter Right Front View

RESTRICTED

PART ONE – INTRODUCTION

Section I

GENERAL

1. SCOPE.*

a. This manual is published for the information of the using arms and services.

b. In addition to a description of the 90-mm Gun M3, Combination Gun Mounts T99, T99E1, and T99E2, and the Gun Mount T8 (M4), this manual contains technical information required for the identification, use, and care of the materiel.

c. In all cases where the nature of the repair, modification, or adjustment is beyond the scope or facilities of the unit, the responsible Ordnance service should be informed so that the trained personnel with suitable tools and equipment may be provided, or proper instructions issued.

2. RECORDS.

a. **Artillery Gun Book.**

(1) The Artillery Gun Book (O.O. Form 5825) is used for the purpose of keeping an accurate record of the materiel. It must always remain with the materiel regardless of where it may be sent. The book is divided as follows: record of assignment; battery commander's daily gun record; inspector's record of examination; forms to be filled in case of premature explosions. This book should be in the possession of organization at all times, and its completeness of records and its whereabouts are the responsibility of the battery commander. It must also contain date of issuance of the materiel, by whom used and the place where issued. If a new howitzer is installed on the carriage, all data recorded in the old book with reference to sights, mounts, etc., must be copied into new book before the old book is relinquished. If a gun book is lost, it should be replaced at once and all entries brought up to date. Additional copies may be obtained by requisition to Supply and Maintenance Department, Raritan Arsenal, Metuchen, New Jersey, on WD AGO Form No. 445. NOTE: *Record of assignment data must be removed and destroyed prior to entering combat.*

*To provide operating instructions with the materiel, this Technical Manual has been published in advance of complete technical review. Any errors or omissions will be corrected by changes or, if extensive, by an early revision.

90-MM GUN M3 MOUNTED IN COMBAT VEHICLES

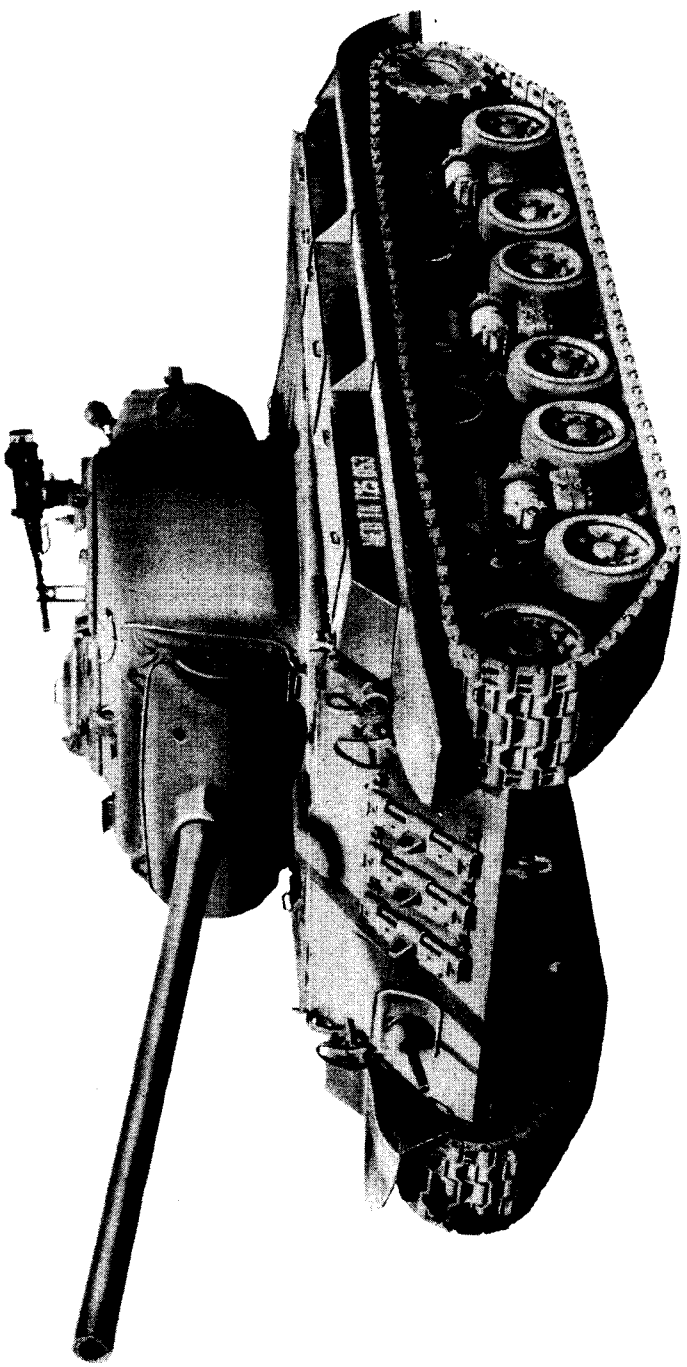

RA PD 59119

Figure 2 — Medium Tank T25E1 — Three-quarter Left Front View

GENERAL

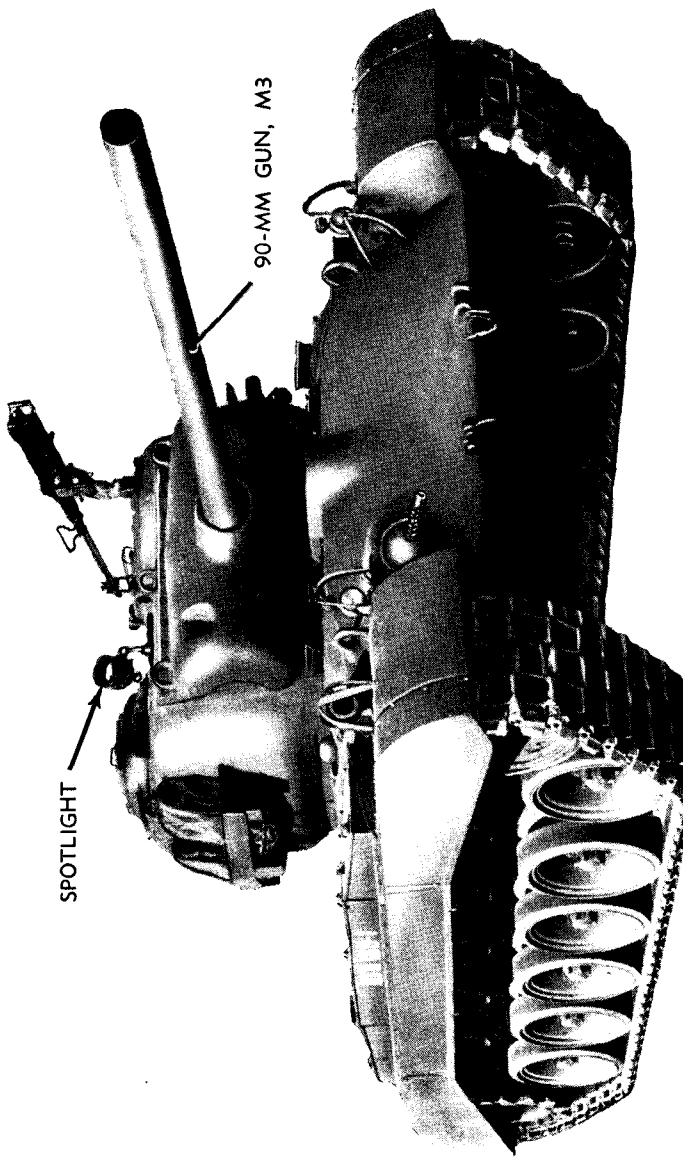

RA PD 63036

Figure 2A — Medium Tank T26E1 — Three-quarter Right Front View

(2) Complete instructions on how to make entries in the Artillery Gun Book are contained therein. It is absolutely essential that the gun book entries be kept complete and up to date. In order to facilitate proper maintenance of the cannon and its related materiel (that is, carriage, recoil mechanism, and associated fire control equipment), and to avoid unnecessary duplication of repairs and maintenance, the following additional entries are to be made in the gun book.

(a) A record of complete Modification Work Orders. This record should show the date completed and bear the initials of the officer or mechanic responsible for completion of the modification.

(b) A record of seasonal changes of lubricants and recoil oil in sufficient detail to prevent duplication and afford proper identification by the inspector.

(3) The estimated accuracy life for cannon may be found in Changes No. 1 to Technical Manual 9-1860 for making the entry in the blank space immediately under inspector's record. The reference to Ordnance Field Service Bulletin 4-1 in instruction number 6 in the gun book should be corrected accordingly.

b. Field Report of Accidents. When an accident involving the use of ammunition occurs during training practice, the procedure prescribed in Army Regulation 750-10 will be observed by the Ordnance officer under whose supervision the ammunition is maintained or issued. Where practicable, reports covering malfunctions of ammunition in combat will be made to the Chief of Ordnance, giving the type of malfunction, the type of ammunition, the lot number of the complete rounds or separate loading components, and the condition under which fired.

c. Unsatisfactory Equipment Report. Suggestions for improvement in design, maintenance, safety, and efficiency of operation prompted by chronic failure or malfunction of the weapon, spare parts, or equipment should be reported on AGO Form No. 468, Unsatisfactory Equipment Report, with all pertinent information necessary to initiate corrective action. The report should be forwarded to the Office, Chief of Ordnance, Field Service Division, Maintenance Branch, through command channels in accordance with instruction number 7 on the form. Such suggestions are encouraged in order that other organizations may benefit.

Section II

DESCRIPTION AND DATA

3. GENERAL.

a. The 90-mm Gun M3 consists of the 90-mm Gun M1 so modified as to adapt the gun for use in tanks and gun motor carriages. This gun is a flat trajectory weapon of the field gun type with an auto-

DESCRIPTION AND DATA

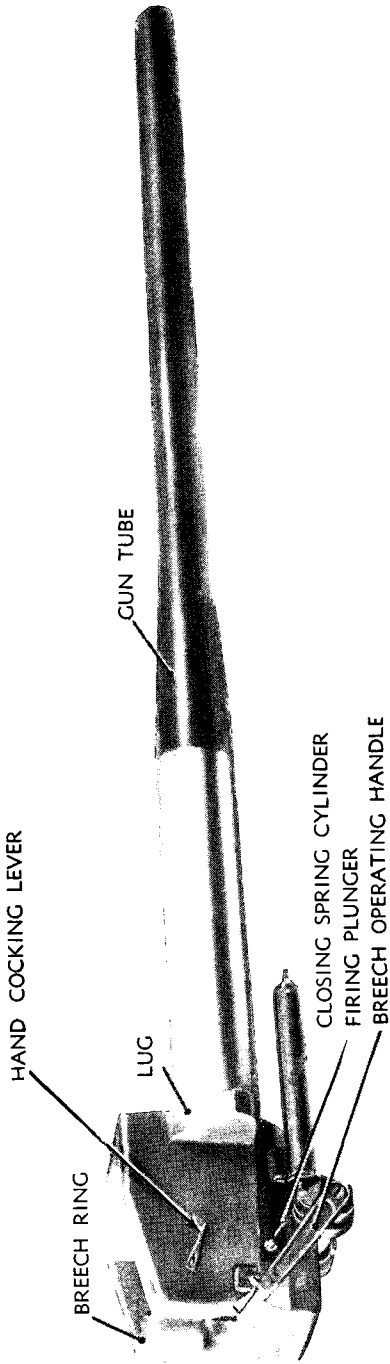

RA PD 59060

Figure 3 — 90-mm Gun M3

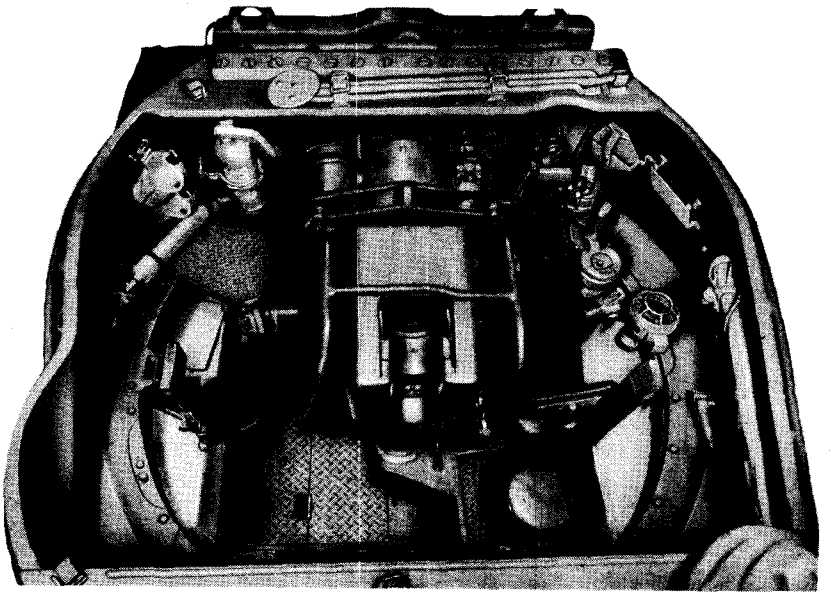

RA PD 76379

Figure 4 — 90-mm Gun Motor Carriage T71 (M36) — Top View of Turret

matically operated vertical sliding drop block breechblock.

b. The Gun Mount T8 (M4) is designed to support and control the 90-mm Gun M3 in the turret of the Gun Motor Carriage T71 (M36). The Combination Gun Mount T99 is designed to support and control the 90-mm Gun M3 in the turret of the Tank T25E1. The Combination Gun Mounts T99E1 and T99E2 are designed to support and control the 90-mm Gun M3 in the turret of the Tank T26E1.

c. The mounts are located in the forward portion of the turret and are so constructed and attached as to permit the gun and mount to traverse as a unit with the turret. The turret can be operated either manually or hydraulically, as is designed to traverse to the left or right a full 360 degrees.

4. IDENTIFICATION INFORMATION.

a. The 90-mm Gun M3 is the 90-mm Gun M1 with the following modifications: the elimination of side rails for sliding support of the gun and carriage, and provision of a cylindrical surface on the tube for that purpose; and the addition of a handle for manual opening of the breech (fig. 3). The markings for gun are located on the top of the breech ring (fig. 5).

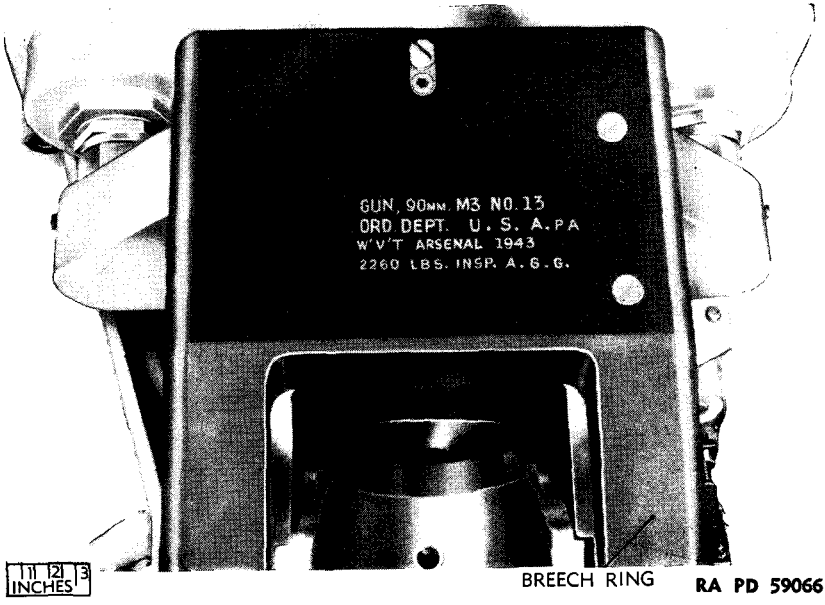

Figure 5 — Gun Markings on Breech Ring

5. DIFFERENCE AMONG MODELS.

a. Difference Between Combination Gun Mounts T99 and T99E1. The Combination Gun Mount T99 has a 3½-inch armor basis for the gun shield and the T99E1 has a 4½-inch armor basis for the gun shield.

b. Difference Between Combination Gun Mounts T99 and T99E1 and Gun Mount T8. The Gun Mount T8 has a 3-inch armor basis for the gun shield, and the coaxial machine gun and the periscope linkage are omitted.

c. Difference Between the Combination Gun Mounts T99E1 and T99E2. T99E1, after the first ten, has the following changes: an equilibrator has been added, the traveling lock, recoil guard, and elevating mechanism were redesigned thus changing designation from the T99E1 to the Combination Gun Mount T99E2.

6. DATA.

a. Data Pertaining to 90-mm Gun M3.

(1) GENERAL.

Weight of gun ..... 2,260 lb
Weight of tube ..... 1,465 lb

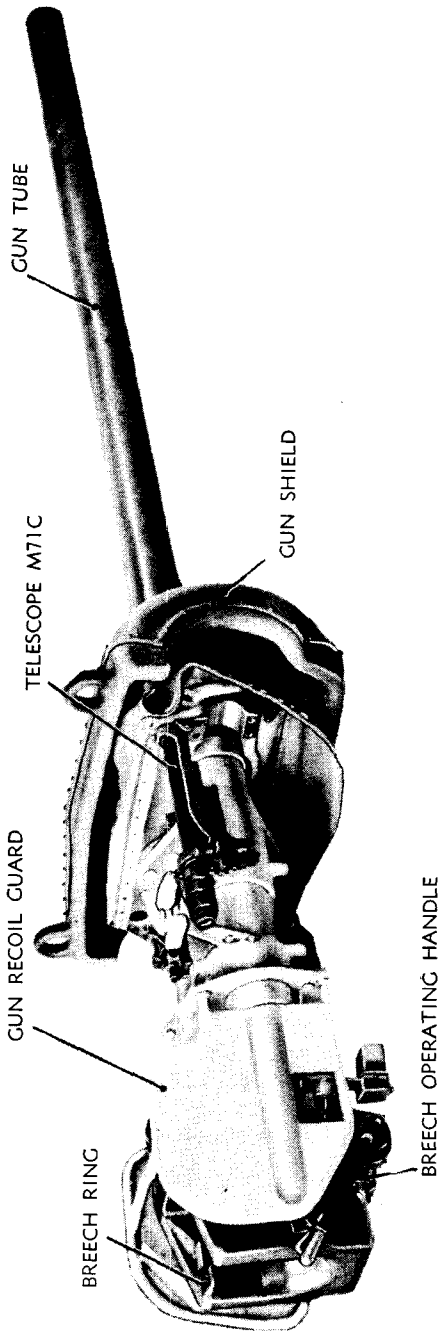

RA PD 59063

Figure 6 — 90-mm Gun M3 and Combination Gun Mount T99 — Right Side View

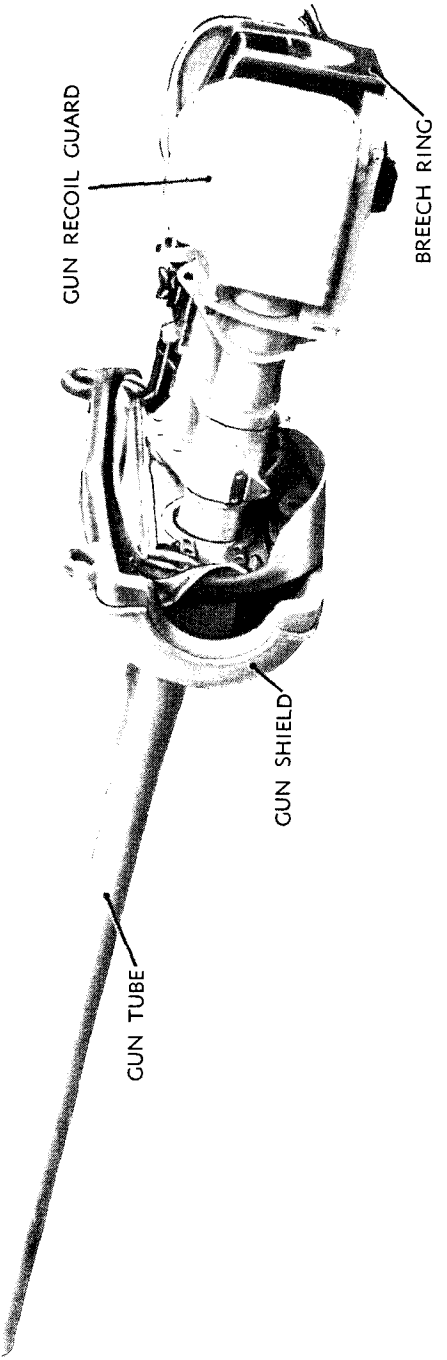

RA PD 59079

Figure 7 — 90-mm Gun M3 and Combination Gun Mount T99 — Left Side View

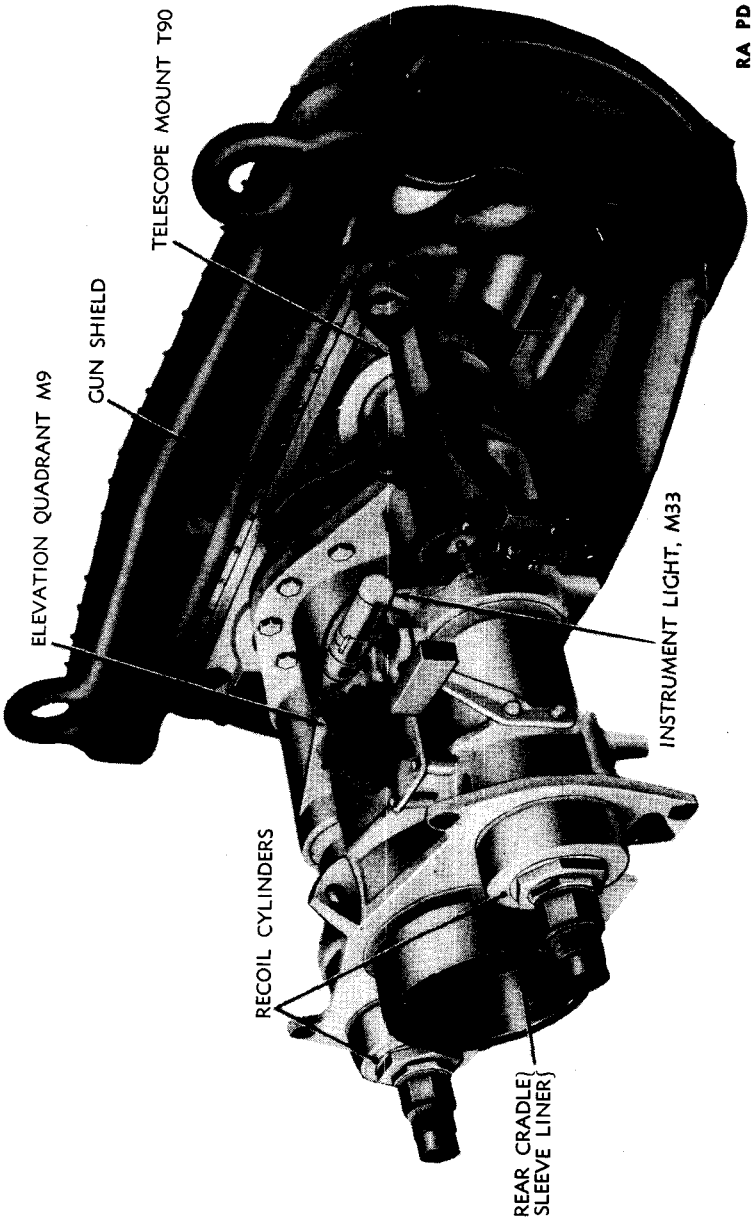

Figure 8 — Combination Gun Mount T99

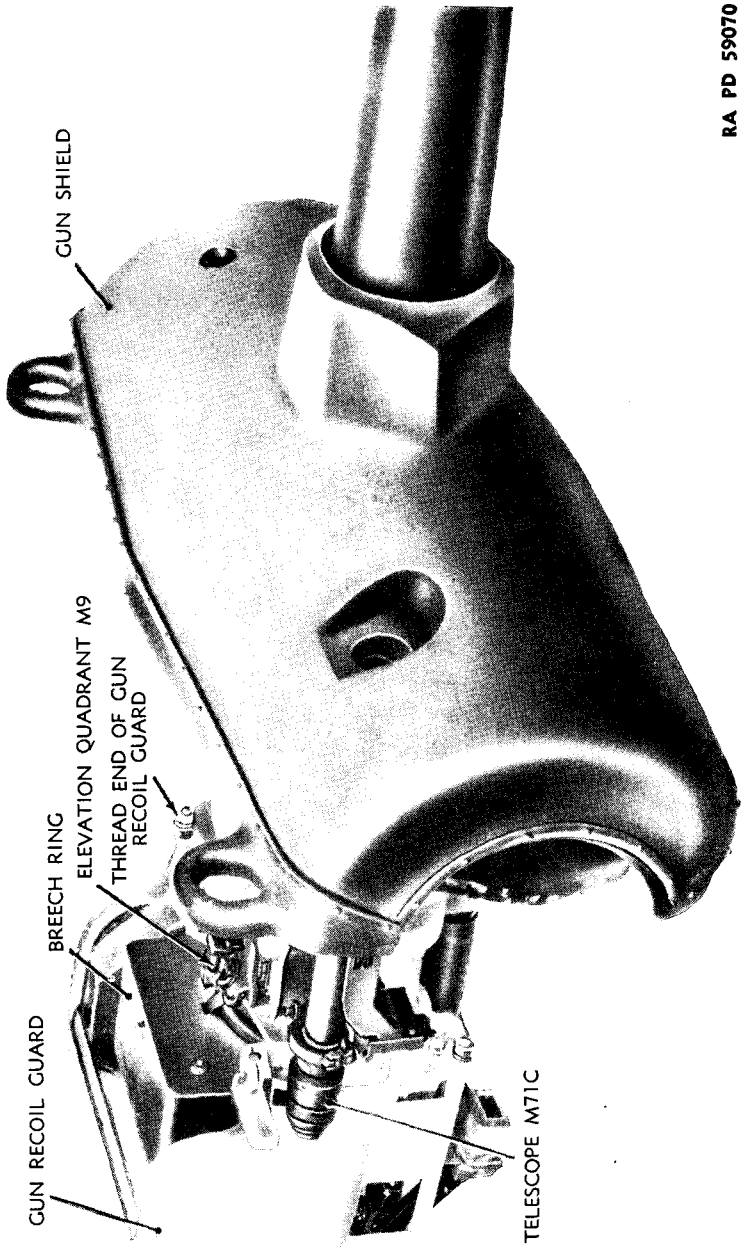

Figure 9 — Combination Gun Mount T99 With Gun Tube Installed

90-MM GUN M3 MOUNTED IN COMBAT VEHICLES

Length of tube .....

Length of tube (muzzle to rear face of breech ring) ..... 186.15 in.

Length of bore ..... 50 cal

Length of rifling ..... 152.4 in.

Type of breechblock ..... Sliding drop block

Weight of breechblock .....

Type of firing mechanism ..... Percussion mechanism

Ammunition ..... For complete ammunition data see section XXIII.

(2) PERFORMANCE.

*Muzzle velocity:

H.E. shell ..... 2,700 ft per sec

A.P.C. projectile ..... 2,670 ft per sec

A.P. shot ..... 2,700 ft per sec

*Range:

H.E. shell (at 45 deg, 37 min) ..... 19,560 yd

A.P.C. projectile (at 1 deg, 45 min) ..... 3,500 yd

A.P. shot (at 2 deg, 30 min) ..... 3,500 yd

b. Data Pertaining to Combination Gun Mounts T99, T99E1, and T99E2 and Gun Mount T8.

	Gun Mount T8 (M4)	Combination Gun Mount T99	Combination Gun Mount T99E1	Combination Gun Mount T99E2
Maximum elevation	30 deg	20 deg	20 deg	20 deg
Maximum depression	10 deg	10 deg	10 deg	10 deg
Length of recoil (maximum)	14 in.	14 in.	14 in.	
Length of recoil (normal)	11¾ in.	12⅜ in.	12⅜ in.	
Type of recoil mechanism	Hydrospring	Hydrospring	Hydrospring	
Armor thickness, base shield (approx)	3 in.	3½ in.	4½ in.	
Minimum time required for hydraulic traverse of 360 degrees	17 sec	17 sec	17 sec	17 sec

*From FT 90-C-2 applicable to gun mounted in motor carriages.

Section III

TOOLS, PARTS, AND ACCESSORIES

7. ORGANIZATIONAL SPARE PARTS.

a. A set of organizational spare parts is supplied to the using arm for field replacement of those parts most likely to become broken, worn, or otherwise unserviceable. The set will be kept complete by requisitioning new parts for those used. The parts comprising the set are listed below for information only; this list will not be used for requisitioning. The authority upon which requisitions are based is SNL D-39.

Spare Part	Piece Mark
CHAIN	A7225000
GASKET	A168098
MECHANISM, percussion, assembly	A207706
PIN	A25829
PLUG	A187175
PLUG	A245998
SPRING	A25833
SPRING	A25835
SPRING	A25836

8. ACCESSORIES.

a. Accessories include the tools and equipment required for such disassembling and assembling as the using arm is authorized to perform, and for the cleaning and preservation of the gun, mount, sighting and fire control equipment, ammunition, etc. They also include chests, covers, tool rolls, and other items necessary to protect the materiel when it is not in use, or when traveling. Accessories should not be used for purposes other than as prescribed, and when not in use should be properly stored.

b. The accessories provided with each weapon are listed below. If it becomes necessary to replace a broken or missing accessory, this list should be checked with SNL D-39 which is the authority for requisitioning.

Accessory	Fig. No.	Stock No.	*Use
BRUSH, bore, M19, w/staffs and wiper ring, complete	1	38-B-992-900	Cleaning and oiling bore of gun.
COVER, bore brush, M518	2	24-C-1059	——
EYEBOLT, breechblock removing	2	41-E-3150	——
FORM, War Dept., Arty. Gun Book (O.O. Form 5825) (blank)	2	28-F-67990	To keep records.

*Where the accessory's use is not indicated, the nomenclature is self-explanatory or the accessory has general use.

90-MM GUN M3 MOUNTED IN COMBAT VEHICLES

BRUSH, BORE, M29, W/STAFFS & WIPER RING, COMPLETE - 38-B-992-900

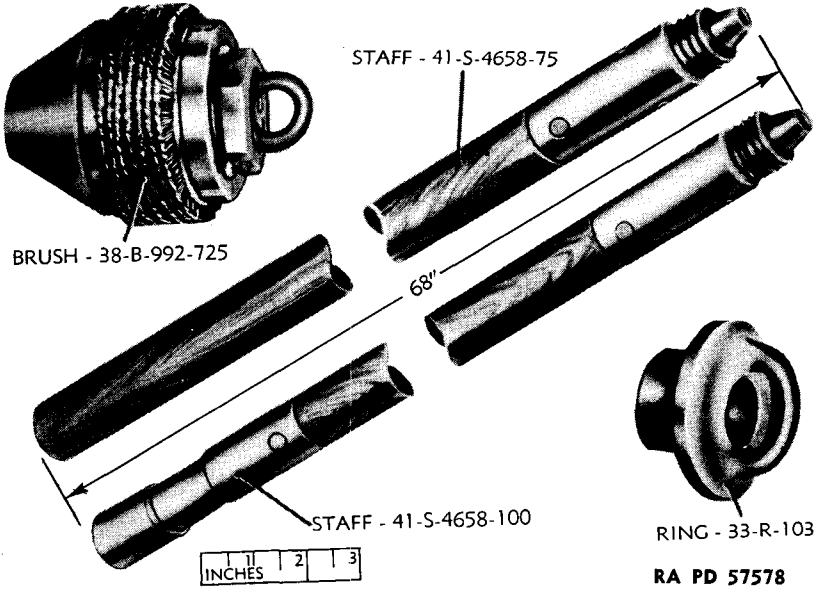

Figure 10 — Tools and Accessories

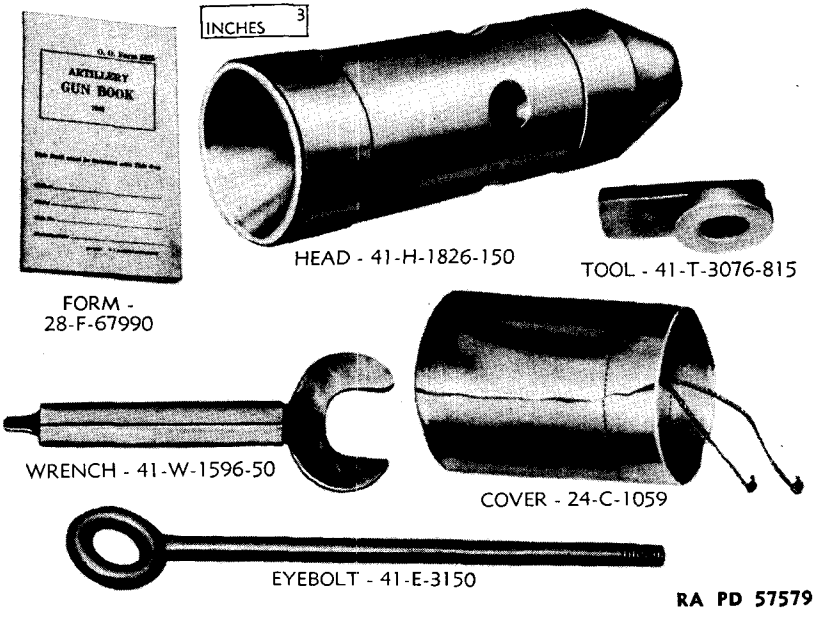

Figure 11 — Tools and Accessories

TOOLS, PARTS, AND ACCESSORIES

Accessory	Fig. No.	Stock No.	*Use
HEAD, rammer, cleaning and unloading	2	41-H-1826-150	——
TOOL, breechblock removing	2	41-T-3076-815	Supports breechblock during disassembly.
WRENCH, fuze, M7A1	2	41-W-1596-50	For interchanging and tightening fuze. Also used to set fuze to "DELAY" or "SUPERQUICK."

*Where the accessory's use is not indicated, the nomenclature is self-explanatory or the accessory has general use.

PART TWO — OPERATING INSTRUCTIONS

Section IV

GENERAL

9. SCOPE.

a. Part Two contains information for the guidance of the personnel responsible for the operation of this equipment. It contains information on the operation of the equipment with the description and location of the controls.

Section V

SERVICE UPON RECEIPT OF MATERIEL

10. GENERAL.

a. Upon receipt of new or used materiel, it is the responsibility of the officer in charge to ascertain whether it is complete and in sound operating condition. A record should be made of any missing parts and of any malfunctions, and any such conditions should be corrected as quickly as possible.

b. Attention should be given to small and minor parts, as these are the more likely to become lost and may seriously affect the proper functioning of the materiel.

c. The materiel should be cleaned and prepared for service in accordance with instructions given in section XII. The materiel should be lubricated in accordance with War Department Lubrication Order, section XI.

11. NEW EQUIPMENT.

a. When a gun and mount are received by the using arm service, the rust-preventive compound must be removed before the gun is inspected. The gun should be disassembled in detail and all parts cleaned with dry-cleaning solvent.

b. Clean bore with dry cloths to remove most of the rust-preventive compound before using dry-cleaning solvent. The parts of the breech mechanism should be soaked in solvent while the bore and breech ring are being cleaned. When most of the rust preventive has been removed from the gun, soak a cloth in solvent and run it through the bore in order to remove the rest of the rust preventive. Clean the breech mechanism parts thoroughly and oil the tube and breech mechanism as prescribed in Part Three, section XI.

SERVICE UPON RECEIPT OF MATERIEL

c. All lubricating fittings should be properly identified with red circles. Bearing, sliding surfaces, hinged joints, latches, and other movable parts should be cleaned and free from rust and other foreign matter and properly lubricated. Materiel should be kept lubricated according to Part Three, section XI.

d. Open and close breech manually. Action should be smooth. NOTE: *The extractors must be tripped to allow the closing spring to raise the breechblock to its fully closed position.* CAUTION: *Do not use hands to release the extractors.*

e. Check the path of the recoil to make sure that it is free from all obstructions. Remove plugs on the recoil cylinder to determine if the recoil cylinders are full (par. 65).

f. Check the operation of the firing mechanism. The firing mechanism must be cocked each time it is desired to check operation (par. 61).

g. Tighten the extractor plunger plugs. Before loading, open breech and examine the bore of the gun to see that it is clear and free from foreign material. Be sure to return operating handle to its closed position.

h. Examine the gun and mount for general appearance. If the paint has deteriorated or become damaged, leaving exposed portions of bare metal, the materiel should be repainted.

i. Elevate and traverse weapon through complete range to check smoothness of operation (par. 38).

j. Check sighting equipment as given in section XXIV.

k. For bore sighting, refer to section XXIV.

l. Examine the Artillery Gun Book (O.O. Form 5825) to make sure that this record has been kept up to date and that all entries have been properly made. The gun book record will also serve to inform the inspector as to the number of rounds fired, maintenance and lubrication performed.

12. USED EQUIPMENT.

a. The services required to insure proper operation of the materiel is identical with the information given in paragraph 11, except for the following additional points:

(1) During disassembly of the breech mechanism and the breech mechanism parts, examine all parts closely for signs of wear. If wear appears to be excessive, replace worn parts with new ones, or with parts that are declared usable by Ordnance maintenance personnel.

(2) Check Artillery Gun Book, section I, to make sure that all War Department Modification Work Orders are included.

Section VI

CONTROLS AND INSTRUMENTS

13. BREECH OPERATING CONTROLS.

a. **Breech Operating Handle** (figs. 3 and 12). The purpose of the breech operating handle is to open and close the breech. This is done by grasping the grip portion of the breech operating handle and pressing handle down.

b. **Hand Cocking Lever Handle** (fig. 12). The purpose of the hand cocking lever handle is to cock the percussion mechanism. This is done by rotating the handle.

14. ELEVATING CONTROLS.

a. **Elevating Handwheel** (fig. 21). The purpose of the elevating handwheel is to elevate and depress the gun. This is done by turning the elevating handwheel.

15. FIRING CONTROLS.

a. **Manual Firing Pedal — 90-mm Gun Motor Carriage T71 (M36) and Tanks T25E1 and T26E1** (fig. 22). The purpose of the manual firing pedal is to fire the 90-mm gun manually. This is done by pressing down on the firing pedal.

b. **Firing Switches in Tanks T25E1 and T26E1 Only** (fig. 11). The purpose of these switches is to fire the 90-mm gun solenoid and caliber .30 machine gun solenoid. This is done by pressing down on each button, respectively, on the front of switch box.

c. **Firing Trigger or Finger Switch in 90-mm Gun Carriage T71 (M36) and Tanks T25E1 and T26E1** (figs. 20 and 21). The purpose of the firing trigger or finger switch is to operate the 90-mm gun electrically. This is done by depressing the trigger.

16. TRAVERSING CONTROLS.

a. **Turret Lock** (fig. 18). The purpose of the turret lock is to lock the turret in locked position when gun is in traveling position. This is done by pulling, and rotating handle of turret lock.

b. **Manual Traverse Control Handle** (fig. 10). The purpose of manual traverse control handle is to rotate the turret. This is done by rotating the handle after the turret lock has been disengaged.

c. **Power Traverse Control Handle** (fig. 13). The purpose of the power traverse control handle is to traverse the turret. This is done by turning the power traverse control handle either to the right

CONTROLS AND INSTRUMENTS

A — TELESCOPE - T93E3
B — MANUAL TRAVERSE CONTROL HANDLE
C — AZIMUTH INDICATOR - M 18
D — POWER TRAVERSE CONTROL HANDLE
E — TURRET LOCK
F — MANUAL FIRING PEDAL
G — BREECH OPERATING HANDLE
H — HAND COCKING LEVER HANDLE
J — ELEVATION QUADRANT - M9

RA PD 59236

Figure 12 — Gunner's Seat and Controls

90-MM GUN M3 MOUNTED IN COMBAT VEHICLES

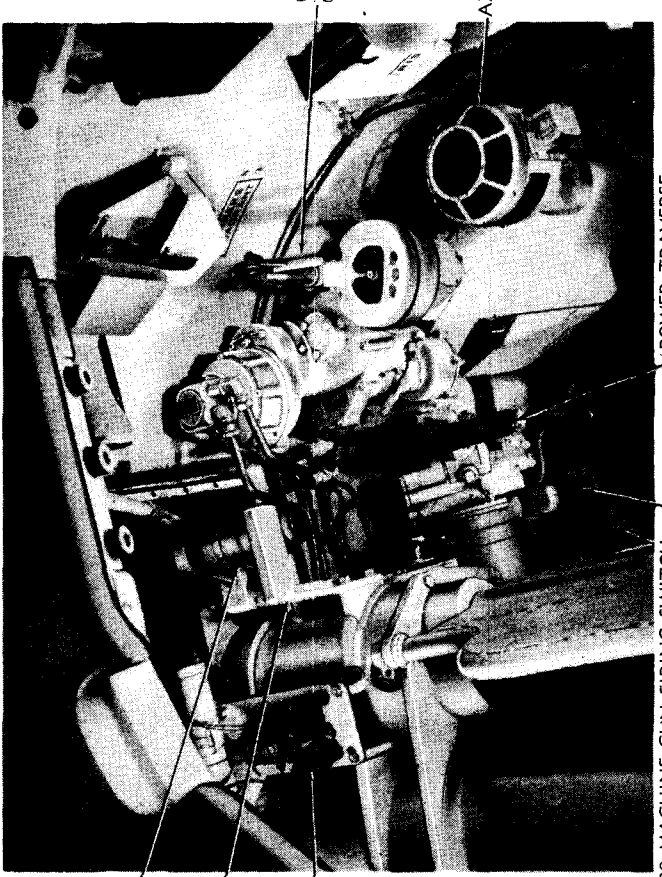

Figure 13 — Turret Controls

or to the left, depending upon the direction of traverse after the turret lock has been disengaged.

d. Commander's Traverse Control Handle on Tanks T25E1 and T26E1 Only (fig. 15). The purpose of the commander's traverse control handle is to traverse the turret. This is done by either pushing the handle forward or pulling it backward after the turret lock has been disengaged.

17. INSTRUMENTS.

a. The only instruments required for the gun and mount are the fire control instruments listed in section XXIV.

Section VII

OPERATION UNDER USUAL CONDITIONS

18. PLACING 90-MM GUN IN FIRING POSITION.

a. Gun Covers. Remove muzzle and breech covers.

b. To Disengage Traveling Lock in Tanks T25E1 and T26E1 Only. Remove traveling lock from gun by unscrewing traveling lock

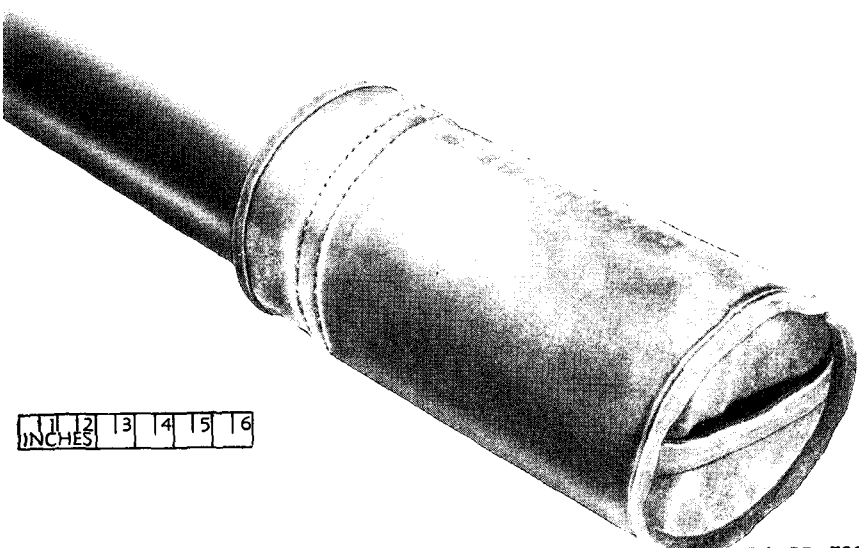

RA PD 59072

Figure 14 — Muzzle Cover — Installed

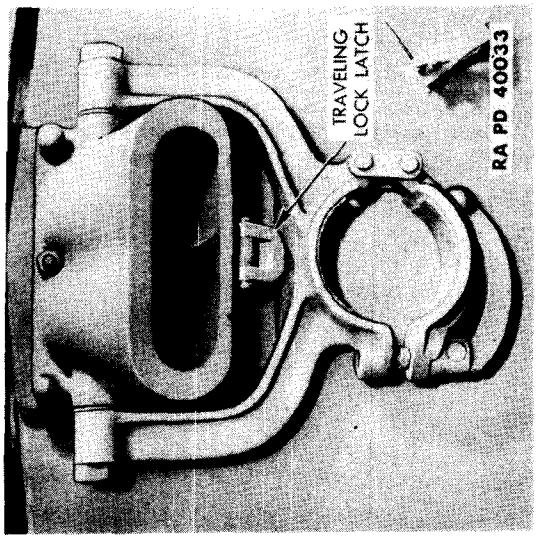

LATCHED POSITION

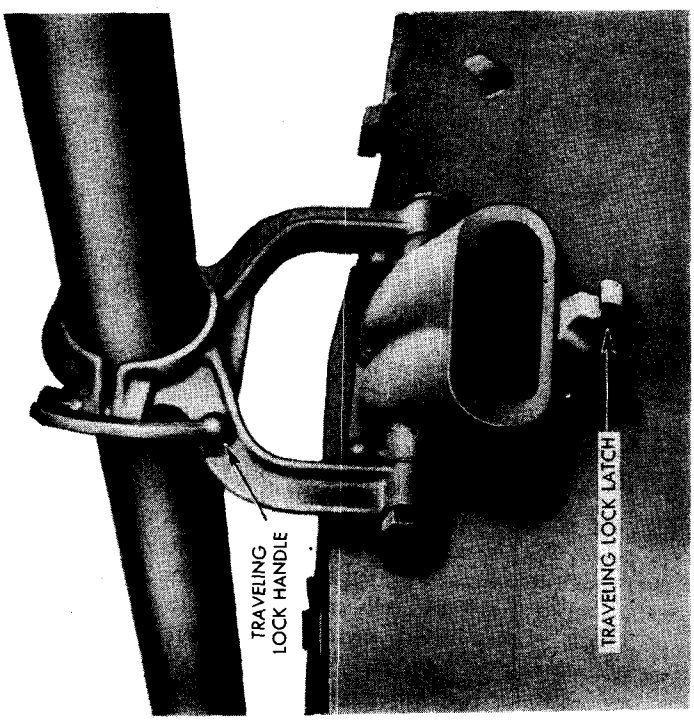

TRAVELING POSITION

Figure 15 — 90-mm Gun Traveling Lock

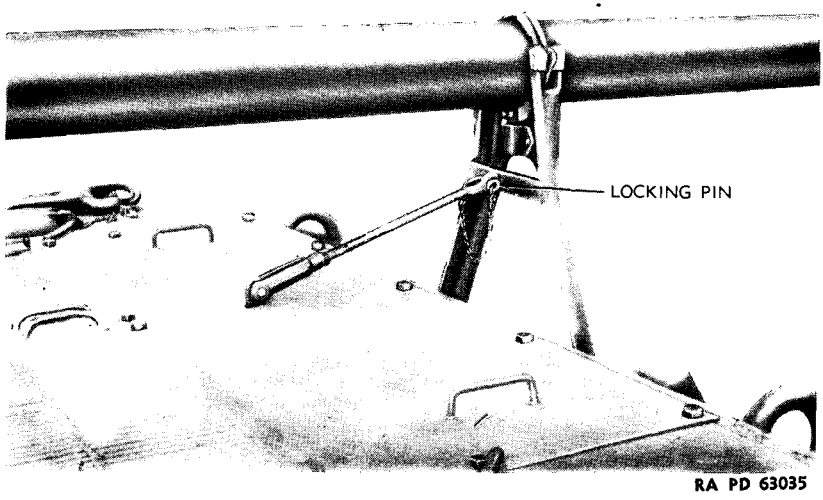

Figure 15A — 90-mm Gun Motor Carriage T71 (M36) — Traveling Lock

handle, and swing the top half of the lock over the gun tube. Screw traveling lock handle in place by means of traveling lock latch.

c. To Disengage Traveling Lock for the 90-mm Gun Motor Carriage T71 (M36). Remove traveling lock from gun by pulling out locking pin which locks the gun to the rear deck (fig. 15 **a**).

d. To Disengage Cradle Traveling Lock. Remove pin from lock.

e. To Disengage Turret Lock. Disengage the turret lock by turning the handle, pulling it out, and rotating one-quarter turn clockwise.

19. TO LOAD.

a. Refer to paragraph 37 for points of inspection and lubrication before and during firing.

b. To Open Breech. To open the breech manually, unlatch the operating handle from the operating handle latch catch. Push the breechblock operating handle down until the extractors lock the breech in open position or until a distinct click can be heard, and then lift the breechblock operating handle up and latch it on the operating handle latch catch. *Keep hands out of gun when breech is open. Return breechblock operating handle to the closed position immediately after opening breech in order to avoid injury to personnel and mechanism.*

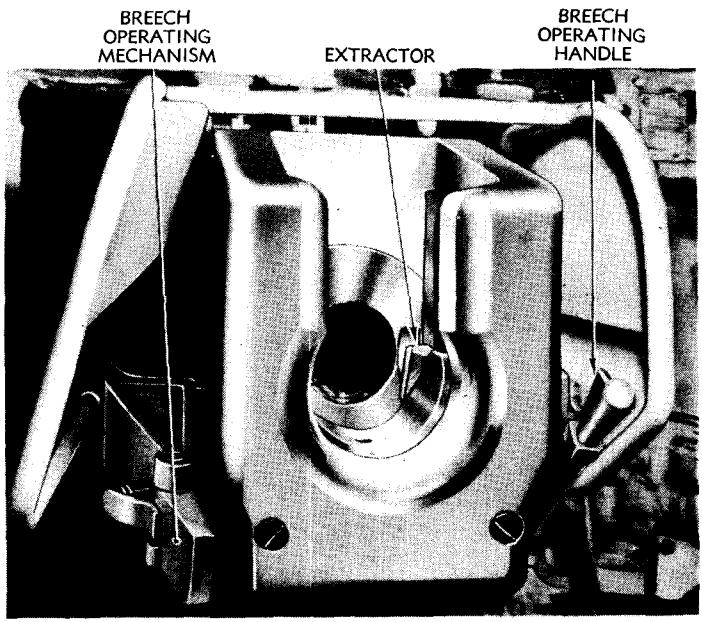

RA PD 59234

Figure 16 — Breechblock in Open Position

c. **To Insert Ammunition.** Place a round in the breech with the nose protruding in the bore. The loader's hand should be moving upward as he shoves the projectile home.

d. **Closing Breech.**

(1) Normally the action of the breech is closed by inserting the shell into the breech recess with sufficient force to trip the extractors and allow the breech to close, due to the tension of the spring in the closing spring cylinder.

(2) After the firing period, the breech may be closed without inserting a round in the breech recess, by first unlatching the operating handle and pressing down. Bear sufficient weight on the handle to overcome the tension of the closing spring, and release the extractors from their locking position by pressing them forward with the base of an empty cartridge case or a block of wood. The breechblock is then free to be eased into its closed position by means of the operating handle which should be finally latched in place. CAUTION: *Do not use hands to release extractors.*

(3) Under ordinary conditions it will be necessary to open the breech only at the start of firing operation. A cam attached to the crank arm within the breech mechanism is operated by the recoil

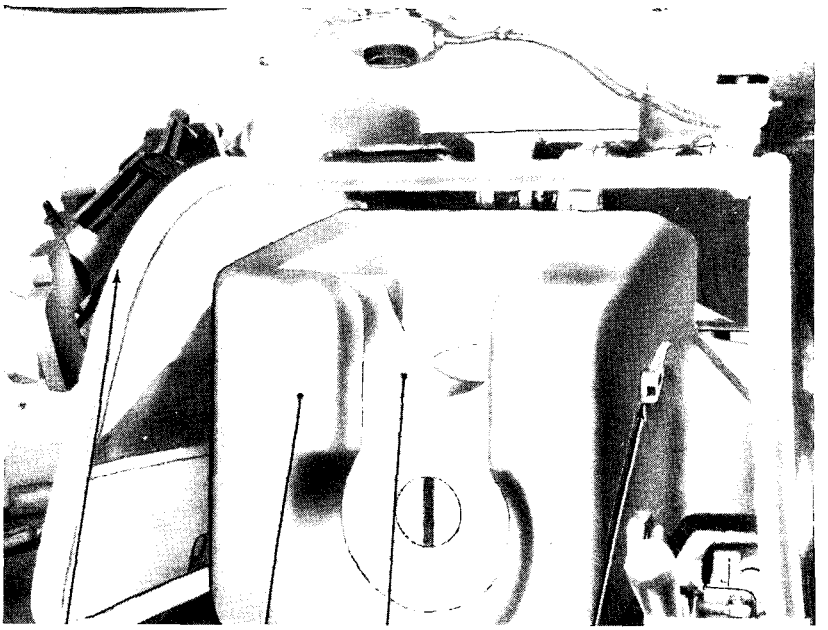

RA PD 59235

Figure 17 — Breechblock in Closed Position

of the gun after firing, and serves to open the breech and extract the empty cartridge case during the recoil and return of gun to battery.

20. TO FIRE.

a. Prior to firing, the gun must be placed in proper position of elevation and traverse.

(1) To Elevate. Rotate the elevating handwheel clockwise. To depress the gun, rotate elevating handwheel counterclockwise.

(2) To Traverse Turret.

(a) Power Operation. Before traversing turret by means of the hydraulic traversing mechanism, make sure personnel are clear of rotating parts. Move gearshift lever in front of gunner and under gear mechanism to the power position (pull lever up toward the top of turret). It may be necessary to turn slightly the manual drive handle on top of gear mechanism to engage gears. Turn traversing motor switch to the "ON" position to start electric drive motor (fig. 21). Disengage turret lock (fig. 18). *It is important to have turret lock completely disengaged before traversing turret and to*

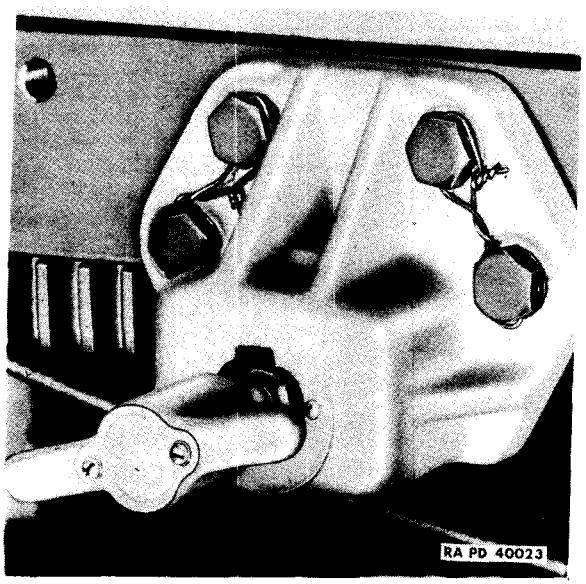

Figure 18 — Turret Lock in Disengaged Position

lock turret in position if need for traversing is completed (par. 16).

(*b*) *Manual Operation.* If electric power fails or if hydraulic traverse system will not operate, due to some other cause, the turret can be rotated by the manual traverse control handle located on top of the gear mechanism to the right of the gunner's seat. Disengage turret lock. Move gearshift lever under gear mechanism to the manual position (turn lever down toward the floor of turret). It may be necessary to turn slightly the manual traverse control handle on top of the gear mechanism to engage gears. The manually operated gears are then engaged with the turret ring gear and pinion. Grip the manual traverse control handle and its associate lever on top of gear mechanism in front of the gunner to release brake in gear box (par. 15 **a** and 16 **b**).

b. During Firing. Normally, the weapon is fired electrically.

(1) TO FIRE ELECTRICALLY ON TANKS T25E1 AND T26E1 ONLY.

(*a*) There are two foot-operated firing switches mounted in a switch box on the turret floor, convenient to the gunner. The right one operates the 90-mm gun solenoid; and the left one, the caliber .30 machine gun solenoid.

OPERATION UNDER USUAL CONDITIONS

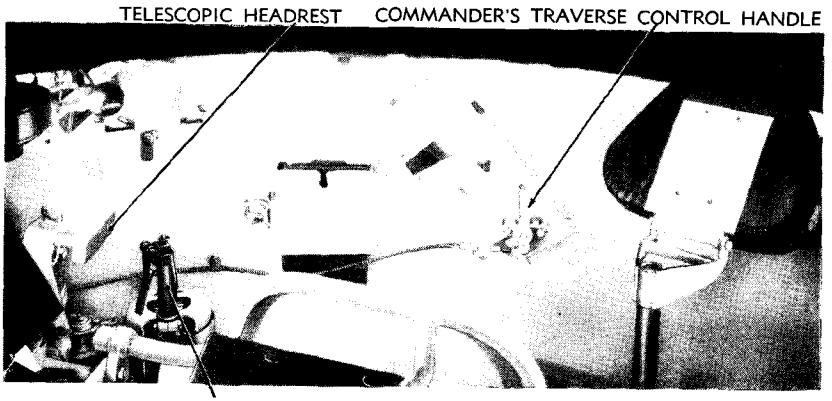

RA PD 59078

Figure 19 — Installation of Traverse Controls

(b) To fire the 90-mm gun electrically on 90-mm gun motor carriage and in Tanks T25E1 and T26E1, depress firing switch or finger switch on the power traverse control handle.

(2) To Fire Manually. If the solenoid does not function, the 90-mm gun may be fired manually by depressing the manual firing pedal located to the left and front of the gunner's seat on the turret floor.

c. **After Firing.** Push safety lever down to its safe position. This locks the firing shaft in position so that the gun can not be fired.

d. **Gun Fails To Fire.** If the gun fails to fire after check in steps (1) and (2), above, the position of the safety lever should be checked. The failure to fire may be due to the gun staying out of battery, failure of the firing mechanism, failure of the breech to close, or defective ammunition. If the gun is in battery, recock by means of the cocking lever on the right side of the breech, and attempt to fire; if the gun still fails to fire after three attempts, wait 30 seconds before opening the breech; then remove round, reload, and attempt to fire again.

21. PLACING THE GUN IN TRAVELING POSITION.

a. Refer to paragraph 37 for points of inspection, cleaning, and lubrication to be observed after firing.

b. **To Engage Traveling Lock.** Place gun in traveling position by taking traveling lock out of traveling lock latch (fig. 15). Unscrew the halves of the traveling lock by means of the traveling lock handle. Place the halves of the traveling lock around gun tube, and screw tight with traveling lock handle (fig. 15).

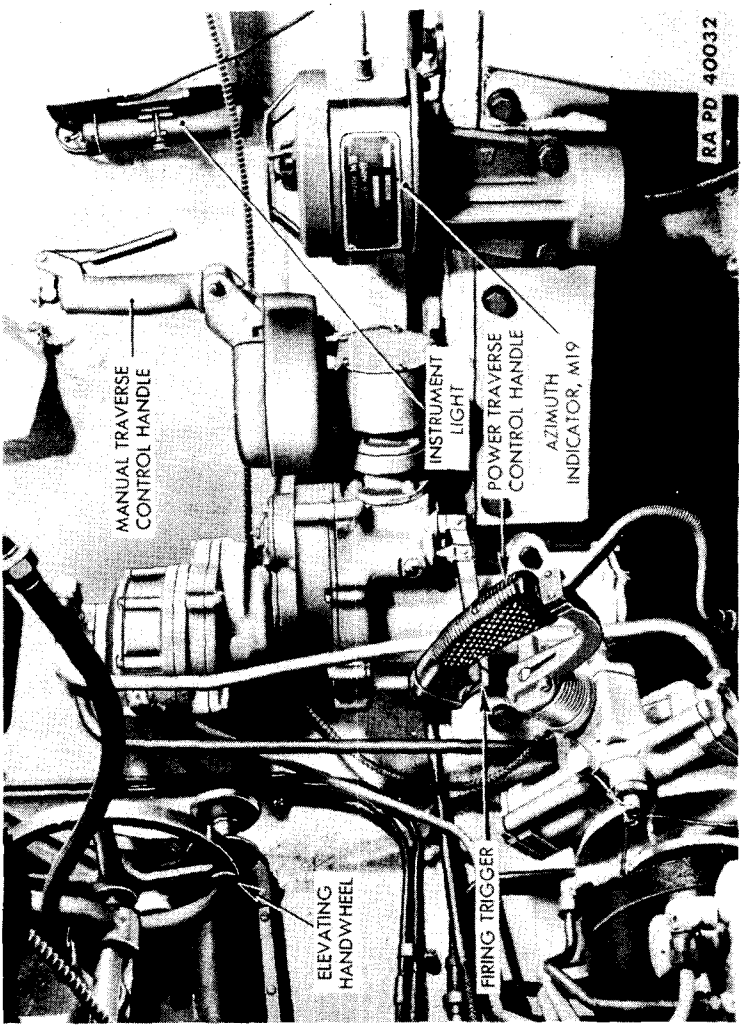

Figure 20 — Traversing Mechanism

OPERATION UNDER USUAL CONDITIONS

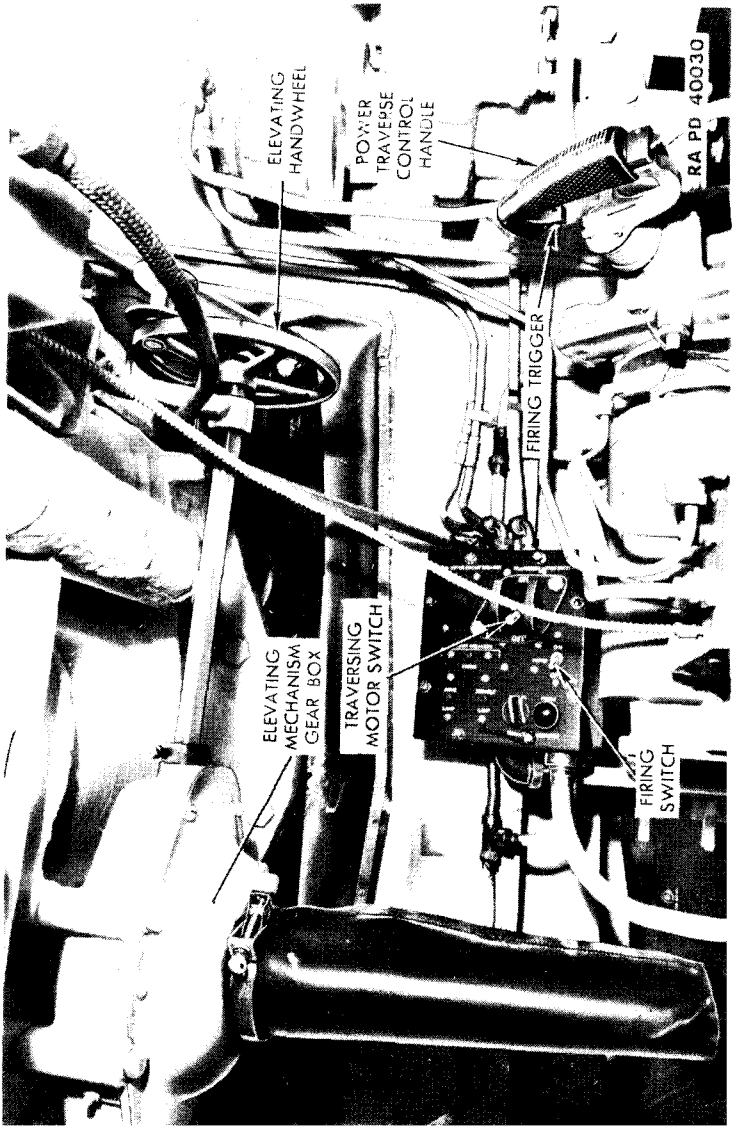

Figure 21 — Turret Control Box and Elevating Mechanism

RA PD 76377

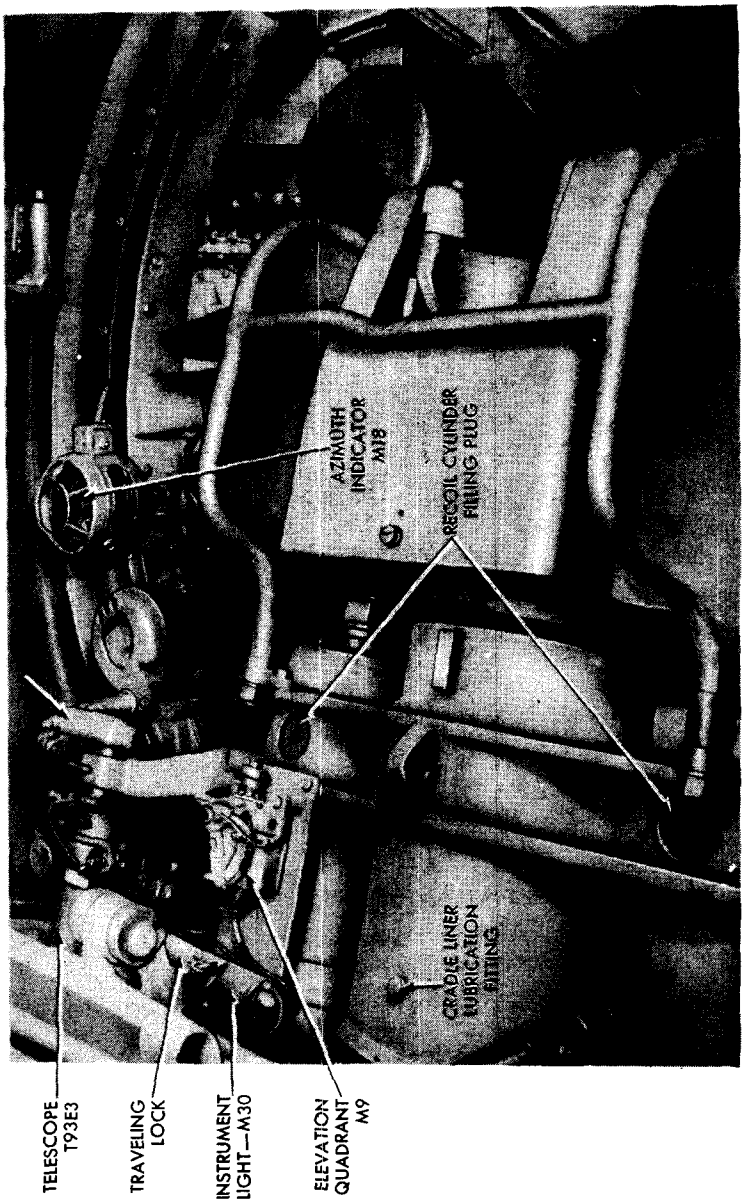

Figure 22 — 90-mm Gun Motor Carriage T71 (M36) — View of Right Side of Turret

OPERATION UNDER USUAL CONDITIONS

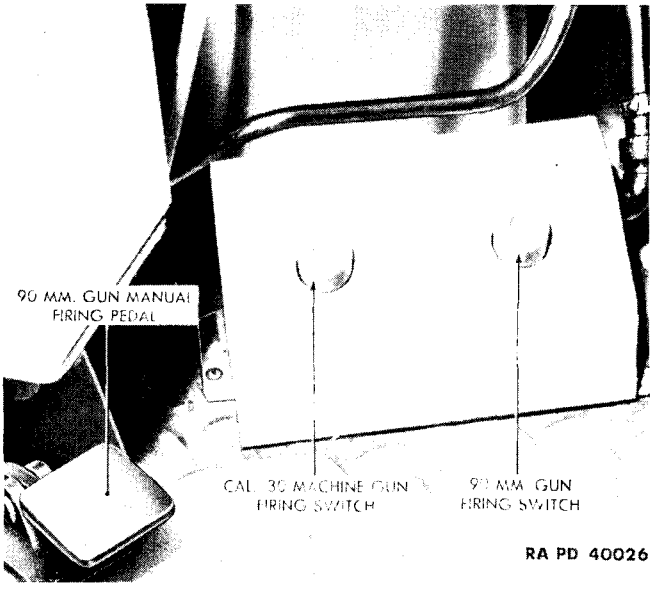

Figure 23 — Firing Switches and Manual Firing Pedal

c. **To Engage Traveling Lock for the 90-mm Gun Motor Carriage T71 (M36).** Place gun in traveling position by placing link around gun tube and inserting locking pin (fig. 15 a).

d. **To Engage Cradle Traveling Lock.** Install pin in cradle traveling lock.

e. **To Engage Turret Lock.** Lock turret in traveling position by pulling, turning, and rotating the handle of turret lock a quarter turn counterclockwise (fig. 12).

f. **Gun Covers.** Install muzzle and breech covers (figs. 14 and 24).

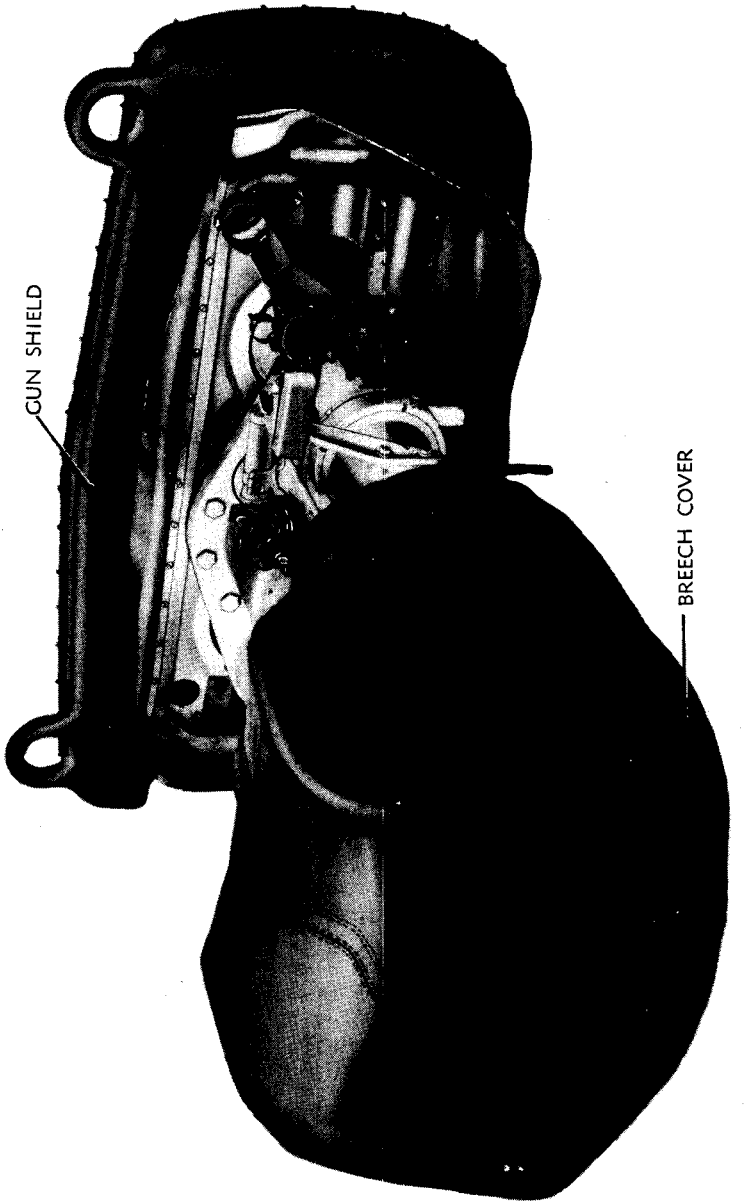

RA PD 59073

Figure 24 — Breech Cover — 90-mm Gun — Installed

Section VIII

OPERATION UNDER UNUSUAL CONDITIONS

22. GENERAL.

a. When operating the gun under unusual conditions, such as tropical or arctic climates, severe dust or sand conditions, and locations near salt water, the precautions below should be followed.

23. EXTREME COLD.

a. Do not clean the gun bore with solutions that may freeze. Bore should be inspected frequently for frosting or congealed lubricants. Care must be taken to make certain that parts are alined properly and normal clearances exist, not only in bearing but also in mechanisms employing packings around rotating or reciprocating shafts and rods. Care must be taken not to overlook cleaning small items that may appear insignificant.

24. TROPICAL CLIMATES.

a. In hot and for tropical climates where humidity is high, or where salt air is present, inspect and clean frequently as required, and also at fixed intervals. Clean and lubricate as soon as possible after firing or if there is any reason to expect corrosion to start.

25. EXTREME DUST AND SAND CONDITIONS.

a. When the gun is active in dusty areas, remove lubricants from exposed sliding parts and elevating racks and pinion, as they will pick up sand or dust, forming an abrasive which will cause rapid wear. Lubricate parts after action (sec. XI).

b. Clean, inspect, and lubricate the materiel more frequently when operating in sandy areas.

26. NEAR SALT WATER AREAS.

a. When the materiel is inactive, the unpainted parts should be covered with a film of light rust-preventive compound. Repaint painted surfaces where paint has been removed. The bore of the tube and the breech mechanism should be kept heavily oiled and should be inspected frequently for rust. In the event that the prescribed lubricant offers insufficient protection against rusting, use medium preservative lubricating oil in the bore and metal surface of the breech mechanism from which it can be readily removed.

Section IX

DEMOLITION TO PREVENT ENEMY USE

27. GENERAL.

a. The destruction of the materiel, subject to capture or abandonment in combat zone, will be undertaken by the using arms only when, in the judgment of the military commander concerned, such action is deemed necessary and as a final resort to keep the materiel from reaching enemy hands.

b. Adequate destruction of artillery materiel means damaging it in such a way that the enemy cannot restore it to usable condition in the combat zone either by repair or by cannibalization. Adequate destruction requires that:

(1) Enough parts essential to the operation of the materiel must be damaged.

(2) Parts must be damaged beyond repair in the combat zone.

(3) The same parts must be destroyed on all materiel, so that the enemy cannot make up one operating unit by assembling parts from several partly destroyed units.

c. The tube and breech are the most vital parts of any piece of artillery. These are the first things to damage. After the tube and breech, in importance come the recoil mechanism, sighting and fire control equipment, mount, vehicle gun book, and firing tables.

28. ADEQUATE AND UNIFORM DESTRUCTION OF MATERIEL.

a. To accomplish adequate and uniform destruction of materiel, it is essential that the following procedures should be performed:

(1) All echelons prepare plans for the destruction of materiel in the event of imminent capture. Such plans must be flexible as to the available time, equipment, and personnel.

(2) All echelons be trained to effect the desired destruction of materiel issued to them.

29. METHOD OF DESTRUCTION IN ORDER OF EFFECTIVENESS.

a. Insert four Unfuzed Incendiary Grenades M14 end to end midway in the tube at 0 degrees elevation. Ignite these four grenades, with a fifth equipped with a 15-second safety fuze. Elapsed time: 2 to 3 minutes.

b. The metal from the grenades will fuze with the tube and fill the grooves.

PART THREE — MAINTENANCE INSTRUCTIONS

Section X

GENERAL

30. SCOPE.

a. Part Three contains information for the guidance of the personnel of the using organizations responsible for the maintenance (first and second echelon) of this equipment. In contains information needed for the performances of the scheduled lubrication and preventive maintenance services, as well as description of the major systems and units and their functions in relation to other components of the equipment.

31. CLEANING, PRESERVING, AND LUBRICATING MATERIALS.

a. The following cleaning, preserving, and lubricating materials are required for use with this materiel. See SNL K-1 and TM 9-850 for detailed information.

BURLAP, jute, 8 oz., 40 in. wide
BRUSH, paint, metal-bound, flat (medium grade) No. 1, 3 in.
CHALK, blue/white, railroad, 1 x 4 in.
CLOTH, abrasive, aluminum-oxide, 5/0-180 (fine)
CLOTH, abrasive, aluminum-oxide, 3/0-120 (medium)
CLOTH, crocus
CLOTH, wiping, cotton, mixed
COMPOUND, rust-preventive, light
ENAMEL, synthetic, olive-drab
GREASE, O.D., No. 0/00
NEEDLES, sacking, steel, 4½ in.
OIL, engine, SAE 10/30
OIL, lubricating, preservative, special
PAPER, lens, tissue (100 sheets per book)
PRIMER, synthetic, rust-inhibitive
SOLVENT, dry-cleaning
SPONGE, cellulose, coarse pore, type A
THINNER, enamel, synthetic
TWINE, jute
WASTE, cotton, white

Section XI

LUBRICATION

32. LUBRICATION ORDER (GUIDE).

a. War Department Lubrication Orders No. 148 and No. 156 (figs. 25 and 26) (formerly referred to as War Department Lubrication Guides No. 148 and No. 156) prescribe first and second echelon lubrication maintenance.

b. The lubrication fittings indicated on the orders are illustrated in figure 27, showing their location on the materiel. The fittings shown in the figures may be identified on the order by the key numbers around the border.

c. A Lubrication Order (formerly referred to as War Department Lubrication Guide) is placed on, or issued with, each item of materiel and is to be carried with it at all times. In the event the materiel is received without an order, a replacement should be immediately requisitioned from the Commanding Officer, Fort Wayne Ordnance Depot, Detroit 32, Michigan.

33. GENERAL LUBRICATION INSTRUCTIONS.

a. **Lubricants.** These are prescribed in the "Key" on the order in accordance with three temperature ranges, "above +32° F," "from +32° F to 0° F," and "below 0° F." The time to change grades of lubricants is determined by maintaining a close check on the operation of the materiel during the approach to prolonged periods when temperatures will be consistently in a higher or lower range. Because of the time element involved in preparing for operation at lower prevailing temperatures, a change to lubricants prescribed for the next lower range will be undertaken the moment operation becomes sluggish. Ordinarily, it will be necessary to change lubricants *only when expected air temperatures will be consistently in the next higher or lower range.*

b. **Service Intervals.** These are specified for normal operating conditions and continuous use of the materiel with frequent firing. Reduce these intervals under extreme conditions such as excessively high or low temperature, prolonged periods of traveling or firing, continued operation in sand or dust, immersion in water, or exposure to moisture. Any one of these conditions may quickly destroy the protective qualities of the lubricant, and require servicing in order to prevent malfunctioning or damage to the materiel.

c. **Lubrication Equipment.**

(1) Each piece of materiel is supplied with equipment for lubricating the materiel. Be sure to clean this equipment both before

and after use. Operate lubricating guns carefully and in such manner as to insure a proper distribution of the lubricant. If lubrication fitting valves stick and prevent the entrance of lubricant, remove the fitting and determine the cause. Replace broken or damaged lubricators. If lubricator cannot be replaced immediately, cover hole with tape as a temporary expedient to prevent the entrance of dirt. If oil lines become clogged, disassemble the line and remove the obstruction.

(2) Lubrication fittings, grease cups, oilers, oilholes, and plugs are circled in red for ready identification.

(3) Wipe lubricators and surrounding surfaces clean before applying lubricant. Where relief valves are provided, apply new lubricant until the old lubricant is forced from the vent. Exceptions are specified in notes or on the Lubrication Order. Metal surfaces on which a film of lubricant must be maintained by manual application will always be wiped clean before the film is renewed.

d. Cleaning.

(1) Unless otherwise specified, use dry-cleaning solvent or Diesel fuel oil to clean or wash all metal parts, whenever partial or total disassembly is undertaken, or when renewing the protective lubricant film on exposed metal surfaces. Flushing of gear cases and bearing housings will not be undertaken unless inclosed mechanism is first disassembled in order to insure complete removal of the solvent prior to application of lubricants. Use of gasoline for cleaning purposes is prohibited. Dry all parts thoroughly before lubricating.

(2) Care must be taken when cleaning oil and grease compartments to insure the complete removal of all residue or sediment. Dirt or other foreign matter should not be allowed to drop into any of the lubricating compartments.

(3) Swab the gun bore immediately after firing, while the tube is still hot, and daily thereafter on the following three days, with a solution of one-half pound of soda ash to each gallon of warm water. Rinse thoroughly with clean water and dry thoroughly before oiling.

e. The following paragraphs present the notes on the Lubrication Order which pertain to lubrication and service of individual units and assemblies, together with supplementary instructions on the method of performing the prescribed lubrication services:

(1) BREECH AND FIRING MECHANISM. Daily and after firing, clean with dry-cleaning solvent and then oil all moving parts and unpainted surfaces with engine oil SAE 30 above +32° F, SAE 10 from +32° F to 0° F, and special preservative lubricating oil below 0° F. To clean firing mechanism, remove and operate pin in dry-cleaning solvent.

90-MM GUN M3 MOUNTED IN COMBAT VEHICLES

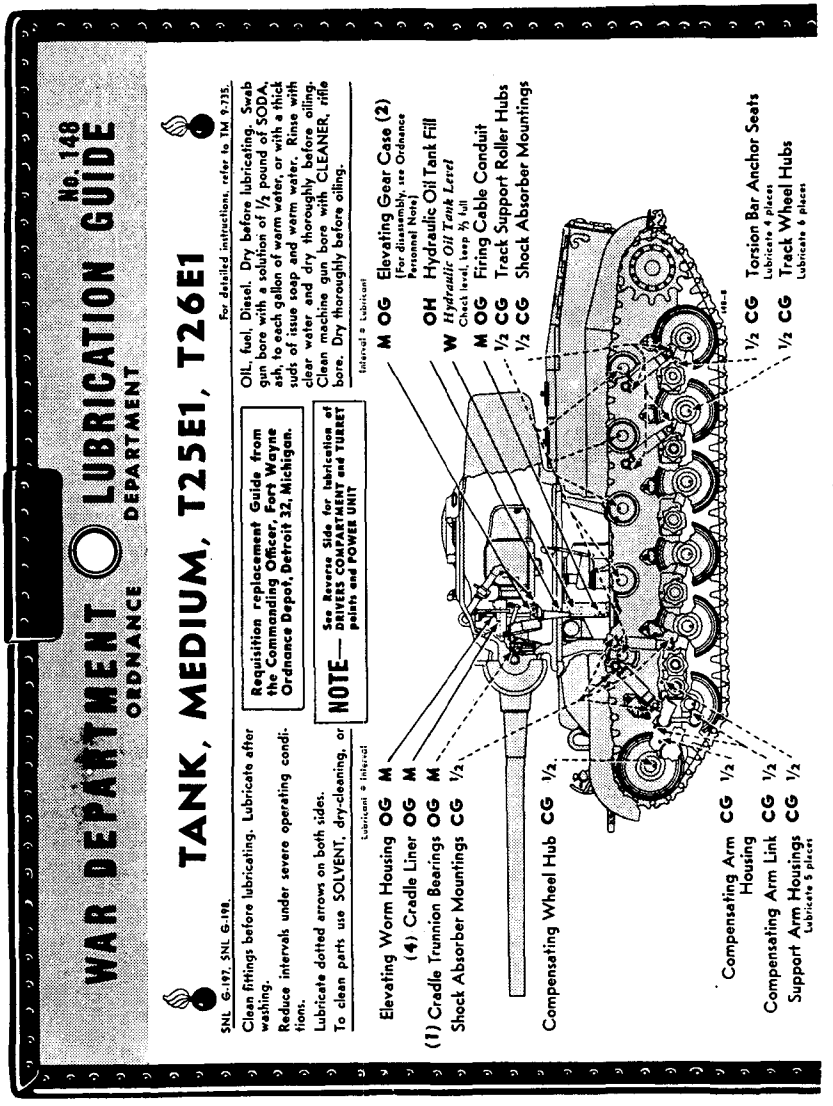

Figure 25 —

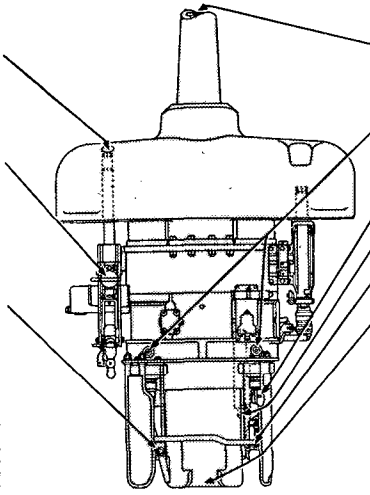

GUN, 90-mm, M3
MOUNT, COMBINATION, GUN, 90-mm, T99, T99E1

NOTES

AIR CLEANERS — (Oil Bath Type) Refill oil reservoir to bead level with used crankcase oil or OE. SAE 30 above +32°F., SAE 10 from +32°F. to 0°F., OH from 0°F. to —40°F. Below —40°F., remove oil and operate dry. Every 500 miles, remove and wash all parts. (Mesh Type) Crankcase, Transmission, Differential and Final Drive Gear Case Breathers. Every 500 miles, daily for engine crankcase breather, remove element, wash, dry and recoil with used crankcase oil or OE. SAE 30 above +32°F., SAE 10 from +32°F. to 0°F., OH from 0°F. to —40°F. Below —40°F., wash and replace dry.
CONTROL CABLES — Whenever the power unit is removed for any purpose, lubricate cables.
CRANKCASES — Drain only when engines are hot.
FLYWHEEL PILOT BEARING — Whenever the engine and transmission are disconnected, remove, clean and repack bearing and fill cavity in flywheel with BR.
GEAR CASES — Drain only when oil is hot. Fill differential to level mark on bayonet gage and final drives to 1 in. below level of filler plug hole when cold or to level of filler plug hole when hot. Before checking oil level in torqmatic transmission, run engine a few minutes, then fill if necessary, to level of COLD mark on gage.
OIL FILTERS — To check operation, remove manual turning nut, turn it and for end and reinstall on same shaft. Run engine at a speed sufficient to raise oil pressure to approximately 30 pounds and observe if nut is turning.
OIL CAN POINTS — Every 250 miles, lubricate Driver's Door Hinges and Latches, Control Rod Clevises and Pins, Driver's Seat Hinges and Control Levers, Steering Brake Lever Linkage, Engine Compartment Grille Hinges and Latches, Engine Throttle Control Linkage, Towing Pintle and Latch with OE. Weekly, lubricate Gun Traveling Rest Hinges and Latch, Elevating Handwheel Handle, Bow Gun Ball Mount, Escape Hatch Hinges and Latches, Hand Traversing Brake Linkage, Turret Lock, Turret Hatch Hinges and Latches, etc., with OE. DO NOT LUBRICATE — Parking Brake Mechanism, Ventilator Motor and Blower, Heater Motor, Hydraulic Pump and Motor, Main and Auxiliary Engine Water Pumps, Track, Commanders Cupola Race Ring. DISASSEMBLED PERIODICALLY BY ORDNANCE PERSONNEL — Accelerator, Throttle, Speed Range Selector Lever and Steering Brake Lever Cross Shaft Bearings, Fan, Differential Oil Pump and Drive Pulley Hub Bearings, Generator Bearings, Auxiliary Engine Rope Starter Pulley Pawls, Engine Magnetos, Shock Absorbers, Traversing Gear Box, Elevating Gear Case, Breech Operating Shaft Bearings. (Refer to TM.)

See Reverse Side for Key

Copy of this Guide will be kept on the material at all times. These lubrication instructions are binding on all echelons of maintenance.

By Order of the Secretary of War:
G. C. Marshall, Chief of Staff.

24 Jan 44
Supersedes all previous issues.

No. 148 [NOT TO BE REPRODUCED in whole or in part without permission of the Office of the Chief of Ordnance.] CHEK-CHART

RA PD 59237

90-MM GUN M3 MOUNTED IN COMBAT VEHICLES

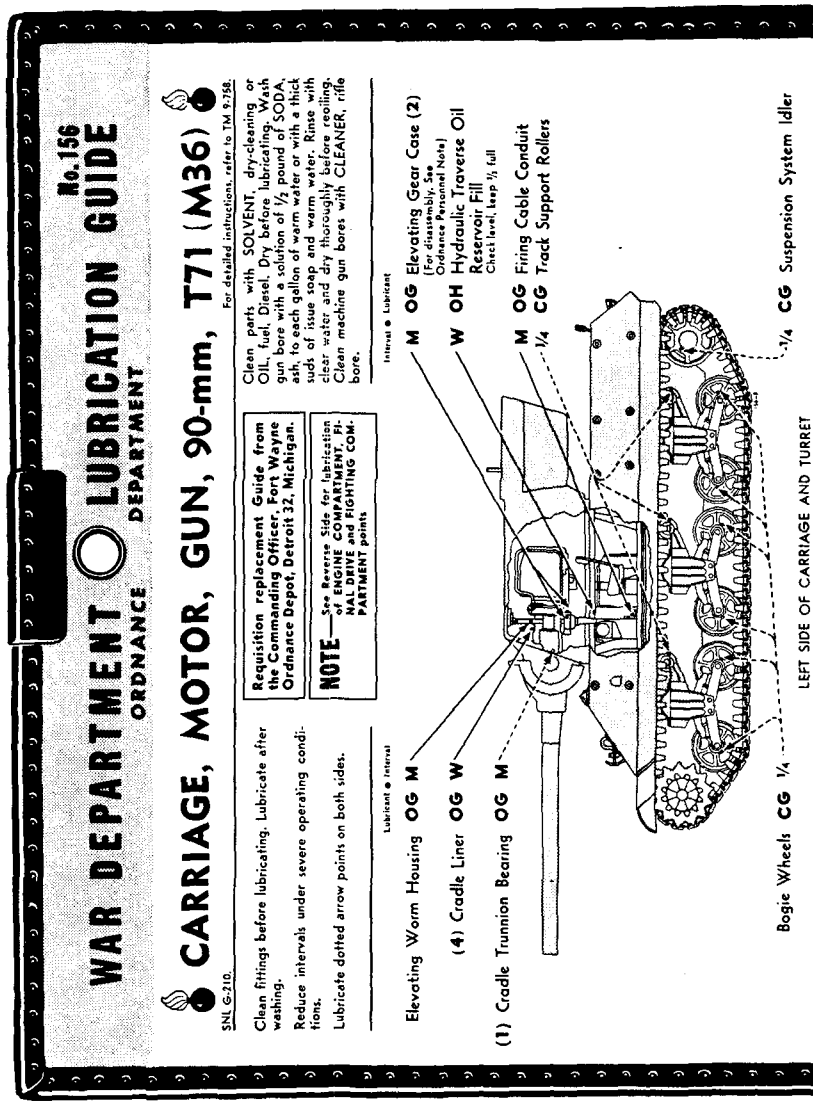

Figure 26 —

LUBRICATION

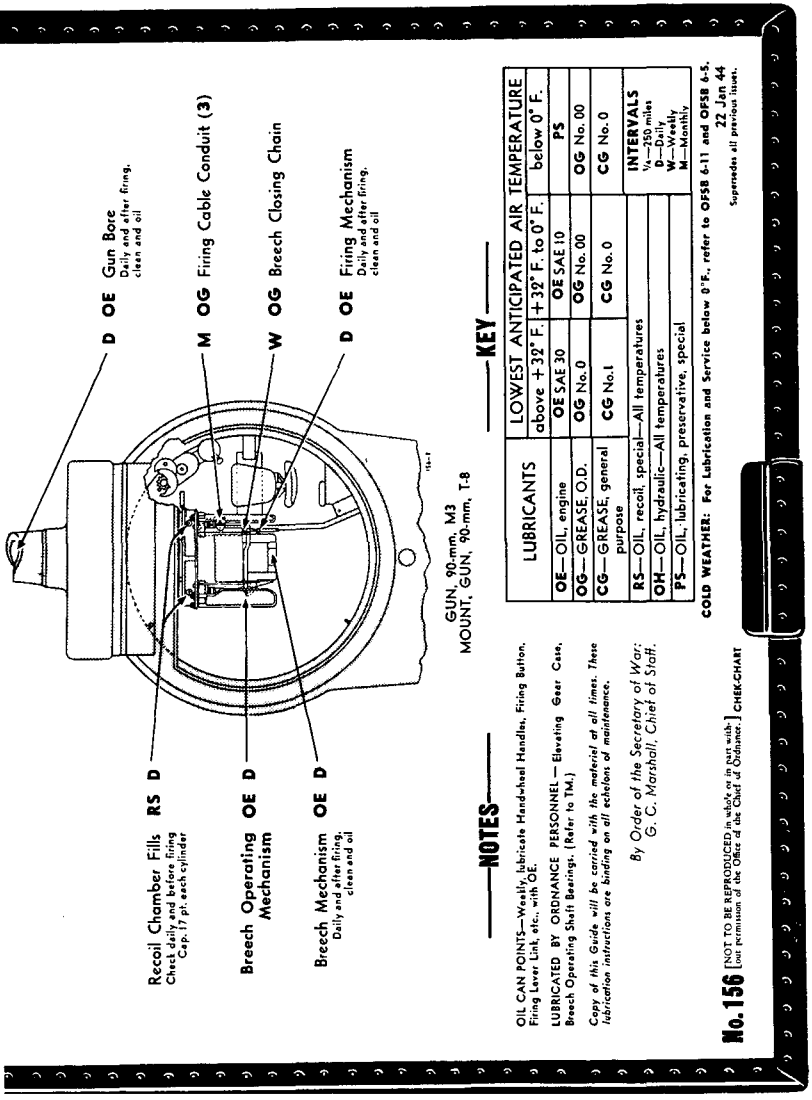

90-MM GUN M3 MOUNTED IN COMBAT VEHICLES

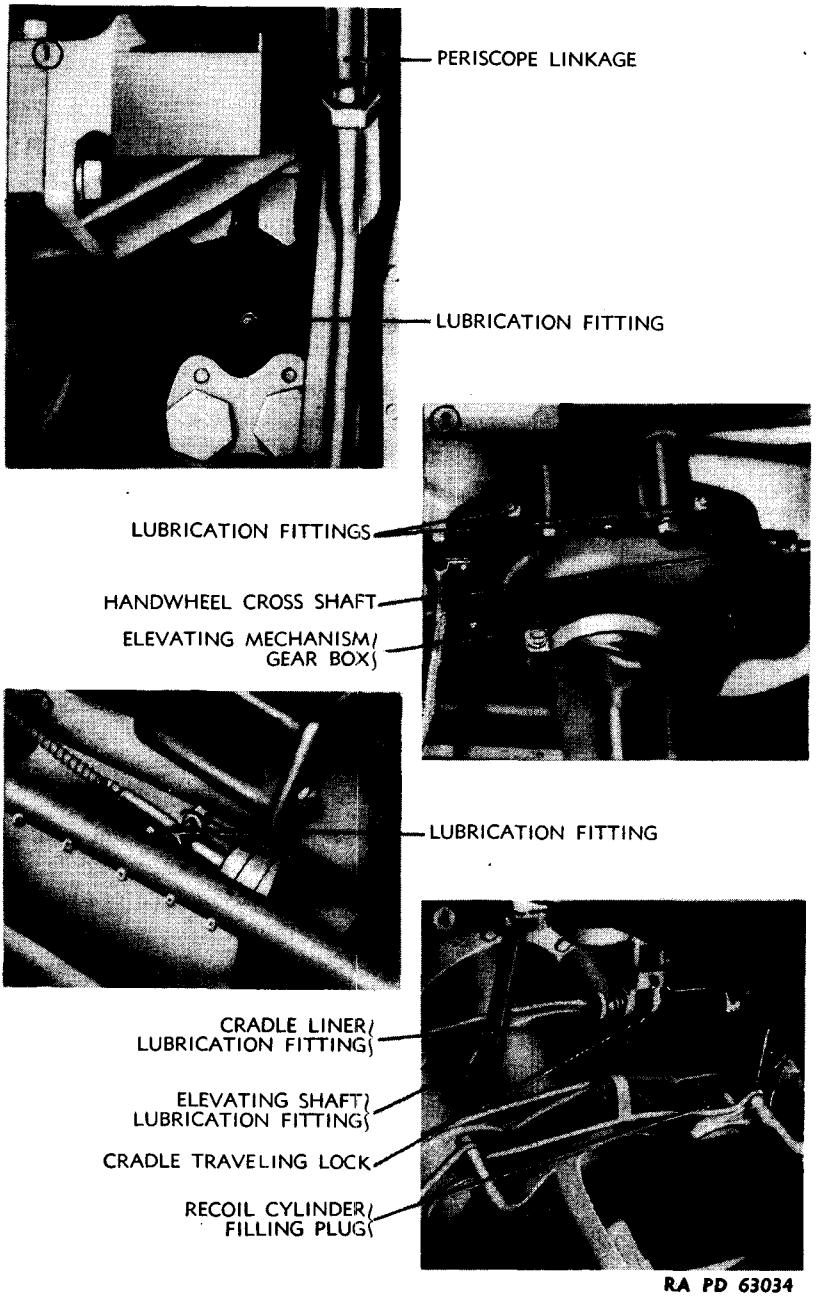

RA PD 63034

Figure 27 — Location of Lubrication Fittings

(2) OILCAN POINTS. Weekly, lubricate handwheel handles, firing button, firing lever link, etc. with engine oil SAE 30 above +32° F, SAE 10 from +32° F to 0° F, and special preservative lubricating oil below 0° F.

34. POINTS TO BE SERVICED AND/OR LUBRICATED BY ORDNANCE MAINTENANCE PERSONNEL.

a. Elevating gear case and breech operating shaft bearings.

35. REPORTS AND RECORDS.

a. Report unsatisfactory performance of materiel to the Ordnance officer responsible for maintenance.

b. Record of seasonal changes of lubricants and recoil oil will be kept in the Artillery Gun Book.

Section XII

PREVENTIVE MAINTENANCE SERVICE

36. GENERAL.

a. Scope. Preventive maintenance services prescribed by Army Regulations are a function of using organization echelons of maintenance. This section contains preventive maintenance service allocated to crew and scheduled preventive maintenance service allocated to (second echelon) organizational maintenance.

b. It is of vital importance to keep all parts of the materiel in proper condition for immediate service. The proper use of tools and accessories, and lubricating, cleaning, and preserving materials is to keep the materiel in proper operating condition.

c. Proper lubrication, with lubricants and intervals prescribed in section XI, is essential to the care and preservation of gun and mount. Examination should be made periodically to insure that lubricants reach the parts for which they are intended.

d. All protective covers for the gun and mount should be installed when in traveling or when gun is not in service. If the materiel is not to be used for a considerable length of time, all exposed, bright, unpainted surfaces should be cleaned with dry-cleaning solvent, thoroughly dried, and protected with a coat of rust-preventive compound.

e. Should enemy shell burst near the weapon or after the gun has been under fire, it must be determined that the weapon is not damaged to a dangerous degree before further use of the gun. Damage of a serious nature should be reported to the Ordnance officer.

f. In disassembling and assembling, thoroughly clean dirt and grit from parts that are going to be removed and installed. Clean parts thoroughly before oiling and assembling. In assembling or disassembling, do not use a steel hammer directly on any part. If copper or lead hammer is not available, use a block of wood as a buffer.

g. Water from a high-pressure hose must never be played into any part of the gun mount. Washing should be done with sponge. Carefully dry parts which have been wet during the washing operation, then oil them in the manner prescribed in section XI.

h. All organizational spare parts and accessories should be kept in an orderly manner so that they can be quickly located when required. Organizational spare parts and accessories for the gun and mount should be maintained as complete as possible at all times. They should be checked with the "Organizational Spare Parts and Accessories" of SNL D-39, and all items which are used for replacement, or which are missing, should be replaced.

i. When the gun and mount are used in hot or cold climates or under extreme conditions of sand, dust, and salt water areas, refer to section VIII.

37. PREVENTIVE MAINTENANCE.

a. Before Firing.

(1) LUBRICATION. The following points should be thoroughly lubricated as prescribed in section XI:
Cradle trunnion bearings
Elevating gear case
Firing cable conduit
Cradle liner
Breech operating mechanism
Firing mechanism
Breech mechanism

(2) RECOIL CYLINDERS. Examine the recoil cylinders for leakage of oil. Check to determine whether or not the gun returns to battery. Check for the proper amount of oil, paragraph 65.

(3) GUN BORE. Check bore and chamber for dirt and obstructions. Clean out the bore with brush if necessary.

(4) BREECH MECHANISM. Examine breech mechanism and breech recess for function, corrosion, and rust. Clean and lubricate (par. 33).

(5) BREECH OPERATING MECHANISM. Examine for function and condition (par. 62).

(6) ELEVATING MECHANISM. Examine for function; clean and lubricate (par. 38).

PREVENTIVE MAINTENANCE SERVICE

(7) TRAVERSING MECHANISM. Examine for function and lubrication (par. 38).

(8) FIRING MECHANISM. Examine for function and adjustment (pars. 38 and 61). Clean and lubricate (figs. 25 and 26).

(9) CRADLE. Examine for condition (par. 38). Clean and lubricate (figs. 25 and 26).

(10) ACCESSORIES. Make sure that all accessories are on hand and in good condition.

(11) AMMUNITION. Check for the proper amount and type of ammunition and that the rounds are clean and dry.

b. During Firing.

(1) GUN BORE. Wash and wipe dry. Examine for erosion, scratches, and markings (par. 38).

(2) BREECH MECHANISM. Examine for condition and lubrication. For correction of malfunction, refer to paragraph 40.

(3) BREECH OPERATING MECHANISM. For correction of malfunction, refer to paragraph 41.

(4) EXTRACTORS. For correction of malfunction, refer to paragraph 40.

(5) FIRING MECHANISM. For correction of malfunction, refer to paragraphs 40 and 41.

(6) RECOIL CYLINDERS. For correction of malfunction, refer to paragraph 41.

c. After Firing.

(1) GUN BORE. Examine for condition, erosion, and lubrication (par. 38). Clean and lubricate (figs. 25 and 26).

(2) BREECH OPERATING MECHANISM. Examine for operation, condition, and lubrication (par. 38). Clean and lubricate (figs. 25 and 26).

(3) BREECH MECHANISM. Examine for operation and lubrication (par. 38). Clean and lubricate to insure proper functioning.

d. Daily Service.

(1) GUN BORE. Examine for condition, erosion, and lubrication (par. 38). Clean and lubricate (par. 33).

(2) RECOIL CYLINDERS. Examine recoil cylinders for leakage of oil. Check for the proper amount of oil.

(3) BREECH OPERATING MECHANISM. Examine for condition and lubrication (figs. 25 and 27).

(4) BREECH MECHANISM. Examine for operation and lubrication (par. 38). Clean and lubricate for proper functioning.

(5) FIRING MECHANISM. Examine for functioning and adjustment (par. 38). Clean and lubricate (figs. 25 and 26).

e. Weekly Service.

(1) CRADLE LINER. Should be lubricated (figs. 25 and 26).

f. 30-day Service.

(1) CRADLE TRUNNION BEARINGS. Should be lubricated (fig. 27).

(2) ELEVATING GEAR CASE. Should be lubricated (fig. 27).

(3) FIRING CABLE CONDUIT. Should be lubricated (fig. 27).

(4) CRADLE LINER. Should be lubricated (fig. 27).

g. Before Traveling.

(1) TRAVELING LOCK. Should be engaged (par. 21 **b**).

(2) CRADLE TRAVELING LOCK. Should be engaged (par. 21 **d**).

(3) TURRET LOCK. Turret lock should be locked (par. 21 **e**).

(4) GUN COVERS. Muzzle and breech covers should be installed on weapon (figs. 14 and 24).

38. INSPECTION OF GUN AND MOUNT.

a. General. Inspection is for the purpose of determining by critical examination the condition of the materiel, whether repairs or adjustments are required, that all modifications authorized by Modification Work Orders have been made, and to insure serviceability and proper functioning of materiel.

b. The Gun as a Unit (fig. 3).

(1) Note the general appearance and smoothness of operation of breech mechanism.

(2) Check closing spring mechanism.

(3) Note condition of bore for wear and deformation of lands, grooves, pitting, and pastilles. Do not confuse coppering of bore with powder fouling. A clean bore is not necessarily a shiny bore and might frequently have a dull gray appearance. A shiny polished bore may indicate that abrasives may have been used in cleaning operation.

c. Breech Ring (fig. 28).

(1) Remove breechblock crank group and breechblock assembly.

(2) Note whether there are scores or burs on any of the bearing surfaces.

(3) Check breechblock sliding surfaces for scoring, burs, rust, and corrosion.

d. Breech Recess. Note whether there are scores or burs on bearing surfaces.

PREVENTIVE MAINTENANCE SERVICE

e. **Breechblock** (figs. 29 and 30).

(1) Check conditions of all springs and threads.

(2) Inspect firing pin hole and front and rear of breechblock.

(3) Inspect firing pin for corrosion, misalinement, pitted surface, and wear.

(4) Note condition of firing pin guide, sear, and related parts for wear, scoring, binding, and misalinement.

(5) Inspect extractors and plungers for wear, scoring, and corrosion.

(6) Inspect operating handle, breechblock, and chain terminal cranks for wear, scoring, pitting, corrosion, and freeness of operation.

f. **Cocking Lever and Sear.**

(1) Check freedom of action of cocking lever.

(2) Remove firing pin retainer and spring.

(3) Lower breechblock to point where firing pin cocking lever moves firing pin back and the sear moves into position to hold guide in cocked positions. Lower breechblock slowly and note that the cocking lever moves firing pin guide back further than is required for the sear to hold the guide. There should be one sixty-fourth to one thirty-second inch further movement. If clearance is less, inspect the hand and automatic cocking levers and the guide for wear, repair, or replace worn parts.

g. **The Mount as a Unit** (fig. 9).

(1) Note general appearance, color, and smoothness of operation of all moving parts and bearings.

(2) Check for cause of any oil or lubricant leakage at flange packings and gaskets.

(3) Check for ease and smoothness of operation of the elevating mechanism.

(4) Check mount shields for cracks, burs, and other damages.

h. **Elevating Mechanism.**

(1) Elevate and depress the gun through the full extent of travel.

(2) Note whether the mechanism operates without binding or excessive backlash.

(3) Check condition of all gears, shafts, and bearings for scoring, pits, wear, and corrosion.

(4) Check flanges for burs.

(5) Check for correct lubrication.

i. **Traversing Mechanism.**

(1) Traverse the gun and mount throughout its complete travel.

(2) Note smoothness of operation without binding or excessive backlash.

j. **Firing Mechanism** (fig. 44).

(1) Check for smoothness of operation of the firing mechanism.

(2) Make sure there is a $\frac{1}{32}$-inch clearance between firing plunger and contact surface of firing trigger.

k. **Recoil Cylinders** (figs. 51, 52, and 53).

(1) Check for leakage at piston rods, cylinder plugs, and nuts.

(2) Check for the proper amount of recoil oil.

(3) Check recoil cylinder securing nuts and locking washers.

(4) Check for green identification ring if cylinders are filled with A x S 808 (special recoil oil).

l. **Cradles.**

(1) Check cradle trunnion bearings for smoothness of operation.

(2) Check cradle liner for scoring, burs, and leakage at seal.

Section XIII

MALFUNCTIONS AND CORRECTIONS

39. GENERAL.

a. A malfunction is an improper action of some parts of the gun, which usually results in a stoppage; for example, failure to fire or failure to extract.

40. MALFUNCTION OF GUN.

a. Fails To Fire When Sound of Firing Pin Striking Primer Is Obtained.

(1) DEFECTIVE PRIMER. After two percussions, wait 30 seconds before opening breech, then insert another round of ammunition. If successive rounds fail to fire, follow procedure in subparagraph b, below.

b. Fails To Fire Until After Several Percussions on Primer, or Fails To Fire When Percussion Is Obtained on Successive Rounds of Ammunition.

(1) INSUFFICIENT BLOW ON PRIMER; FIRING MECHANISM PARTS NOT WORKING FREELY. Remove firing spring retainer, firing spring, and firing pin guide assembly. Wash parts with dry-cleaning solvent. Check freedom of firing pin. Check freedom of firing pin guide in bore of breechblock and of firing spring stop guide, disassembling

firing pin and guide if necessary. Remove any burs with crocus cloth. Lubricate and replace broken or damaged parts.

(2) INSUFFICIENT BLOW ON PRIMER DUE TO BROKEN OR WEAK FIRING SPRING. Replace firing spring.

(3) BROKEN OR DEFORMED POINT ON FIRING PIN. Replace Firing Pin.

c. Fails To Fire; No Percussion on Primer.

(1) BROKEN FIRING SPRING AND BROKEN OR DEFORMED FIRING PIN. Replace broken parts.

(2) SEAR NOT RETAINING FIRING PIN IN COCKED POSITION.

(a) Disassemble sear and sear spring, wash with dry-cleaning solvent, and lubricate. Check firing plunger for freedom of action.

(b) Replace broken or damaged parts.

(3) BROKEN OR DEFORMED COCKING LEVER. Replace unserviceable parts.

d. Failure To Extract Cartridge.

(1) BROKEN EXTRACTOR. Ram case out. Examine chamber for deformation and irregularities which might cause difficult extraction. Disassemble breechblock and replace broken extractor.

e. Breech Fails To Close When Extractors Are Forced Forward.

(1) BROKEN CLOSING SPRING OR CHAIN. Disassemble closing spring mechanism and replace broken parts.

f. Breechblock Fails To Travel to Fully Closed Position When Extractors Are Forced Forward.

(1) IMPROPER CHAMBERING OF CARTRIDGE CASE. Manually drop the block and insert another round.

(2) LACK OF PROPER COMPRESSION OF CLOSING SPRING. Adjust tension by means of the closing spring piston rod nut.

(3) LACK OF LUBRICATION ON BREECHBLOCK BEARING SURFACES. Clean and lubricate.

41. MALFUNCTION OF MOUNTS.

a. Gun Does Not Return to Battery.

(1) WEAK OR BROKEN SPRING IN RECOIL MECHANISM. Notify Ordnance maintenance personnel to replace recoil mechanism.

(2) RECOIL CYLINDERS HAVE TOO MUCH OIL. Establish proper level (par. 65).

b. Gun Recoils More Than Normal.

(1) INSUFFICIENT OIL IN RECOIL MECHANISM. Refill to proper level (par. 65).

(2) BROKEN OR WEAK RECOIL SPRINGS. Report to Ordnance maintenance personnel.

c. Breech Operating Mechanism Does Not Operate Breech Operating Shaft.

(1) WEAK OR BROKEN BREECH OPERATING CAM SPRING. Replace spring.

d. Firing Lever Does Not Depress Plunger.

(1) BINDING OF FIRING SHAFT. Free up firing shaft.

(2) IMPROPER ADJUSTMENT OF FIRING LEVER. Adjust.

e. Firing Lever Does Not Return.

(1) BROKEN OR WEAK FIRING SHAFT RETURN SPRING. Replace spring.

(2) MISSING RETURN SPRING COTTER PIN. Install cotter pin.

f. Handwheel Will Not Elevate or Depress Cradle.

(1) SHIFTER LEVER BROKEN. Replace shifter lever.

(2) HANDWHEEL LOOSE ON SHAFT. Tighten handwheel nut.

(3) ELEVATING GEARS BINDING. Remove all obstruction.

g. Cradle Binds; Will Not Elevate or Depress.

(1) BROKEN OR BINDING TRUNNION BEARINGS. Notify Ordnance maintenance personnel.

(2) CHIPPED ELEVATING GEAR RACK. Notify Ordnance maintenance personnel.

Section XIV

BREECH MECHANISM

42. GENERAL.

a. Breech mechanism has a rectangular breechblock which slides up and down in its recess in the breech ring to open and close breech. Its action is either manual or automatic. The breech mechanism is composed of the percussion mechanism, breechblock assembly, breech operating shaft, breechblock crank, extractors, breechblock operating crank, chain terminal crank, and the closing spring cylinder.

43. BREECH RING (fig. 28).

a. The lugs projecting from the right and left at the front end are threaded to receive the piston rods of the recoil cylinders.

b. The forward end of the breech ring is bored and threaded so that the tube may be screwed into it. The top face has a breech ring key screw which sets into the breech ring key.

BREECH MECHANISM

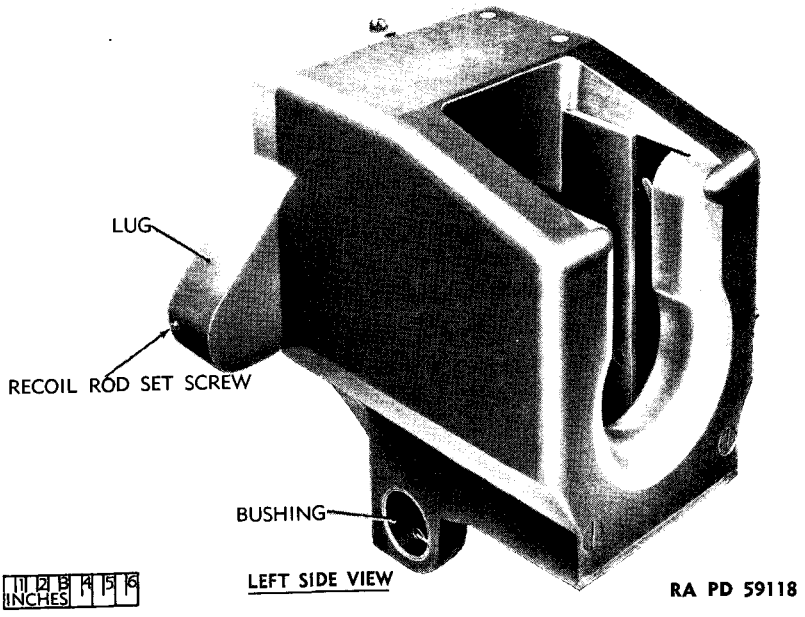

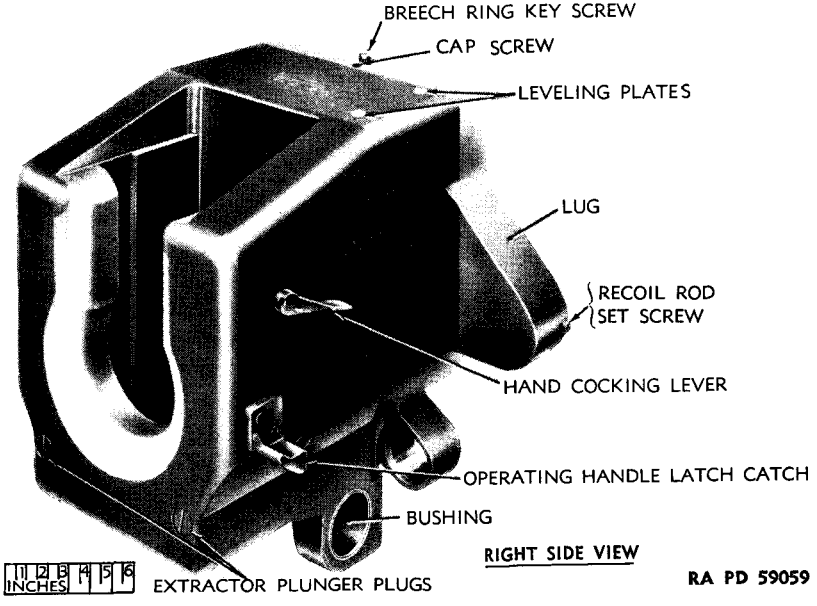

Figure 28 — Breech Ring

c. The rear wall of the recess has a U-shaped slot to clear the cartridge case when loading or ejecting. Inside the recess in the top and bottom walls are recesses or slots which receive the outer trunnions of the extractors. Two holes in the rear face of the breech ring, extending forward into the extractor trunnion recesses, house the extractor plungers and plunger springs. The rear ends of the holes are threaded for the extractor plunger plugs.

d. A vertical hole is drilled, counterbored, and threaded through the lower wall of the breech ring to receive the firing plunger and firing plunger retainer.

44. BREECHBLOCK (fig. 29).

a. **General.** The breechblock is a sliding drop block type. The breechblock has a guide rib on either side which slides in a corresponding groove on each side of the breech recess when the block is raised and lowered. The top of the block is U-shaped to guide the cartridge into the chamber; the upper front edge is beveled to drive the cartridge into the chamber as the breechblock is raised; and the rear face and guides of the breechblock and the rear wall of the breech recess are inclined slightly so that the breechblock, in rising, moves forward to complete the seating of the cartridge as the breech is closed. In each side of the breechblock is a groove in which the inner trunnion of the extractor slides. The bottom of the breechblock contains an inclined T-slot, in which the crossheads of the breechblock crank slide to raise and lower the block. The breechblock houses the percussion mechanism assembly, firing spring, firing spring retainer, sear, and automatic cocking lever.

b. **Removal of Breechblock.** With breech closed, remove percussion mechanism parts from central bore of breechblock as directed in paragraph 54. Remove extractor plunger plugs and springs. Screw the breechblock removing eyebolt into the top of breechblock. Insert a ⅜-inch rod into the holes of the forward end of the closing spring cylinder. Permit the breechblock to rise slowly until the inserted rod is caught in front of the piston rod, stopping the action of the closing spring. Lift the breechblock slightly with the breechblock removing eyebolt to slacken the cable chain, remove the cotter pin, and pull out the chain terminal pin from the chain terminal crank. Remove breech operating handle, breech operating shaft, and chain terminal crank. Then pull breechblock out of breech ring with breechblock removing eyebolt.

45. INSTALLATION OF BREECHBLOCK (fig. 31).

a. Using the breechblock removing eyebolt, lower the breechblock carefully into the recess, holding the hand cocking lever handle upward as far as it will go to guide the inner arm of the hand cocking

BREECH MECHANISM

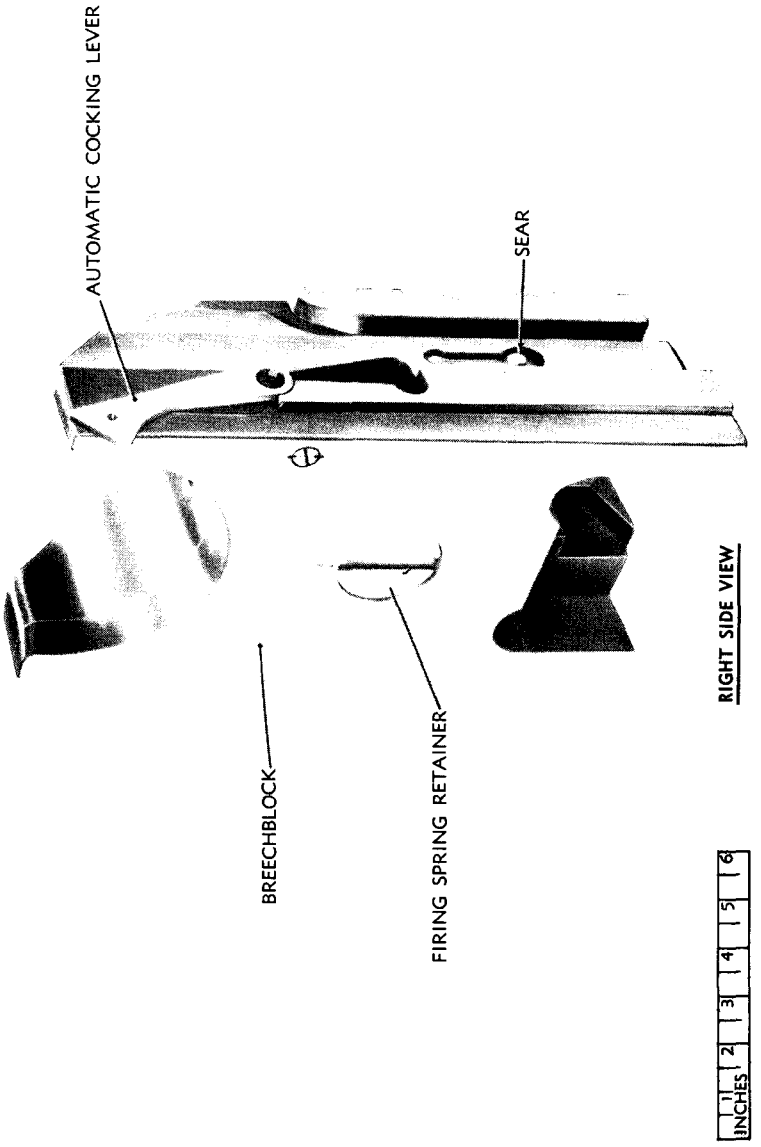

RA PD 26145

Figure 29 — Breechblock Assembly

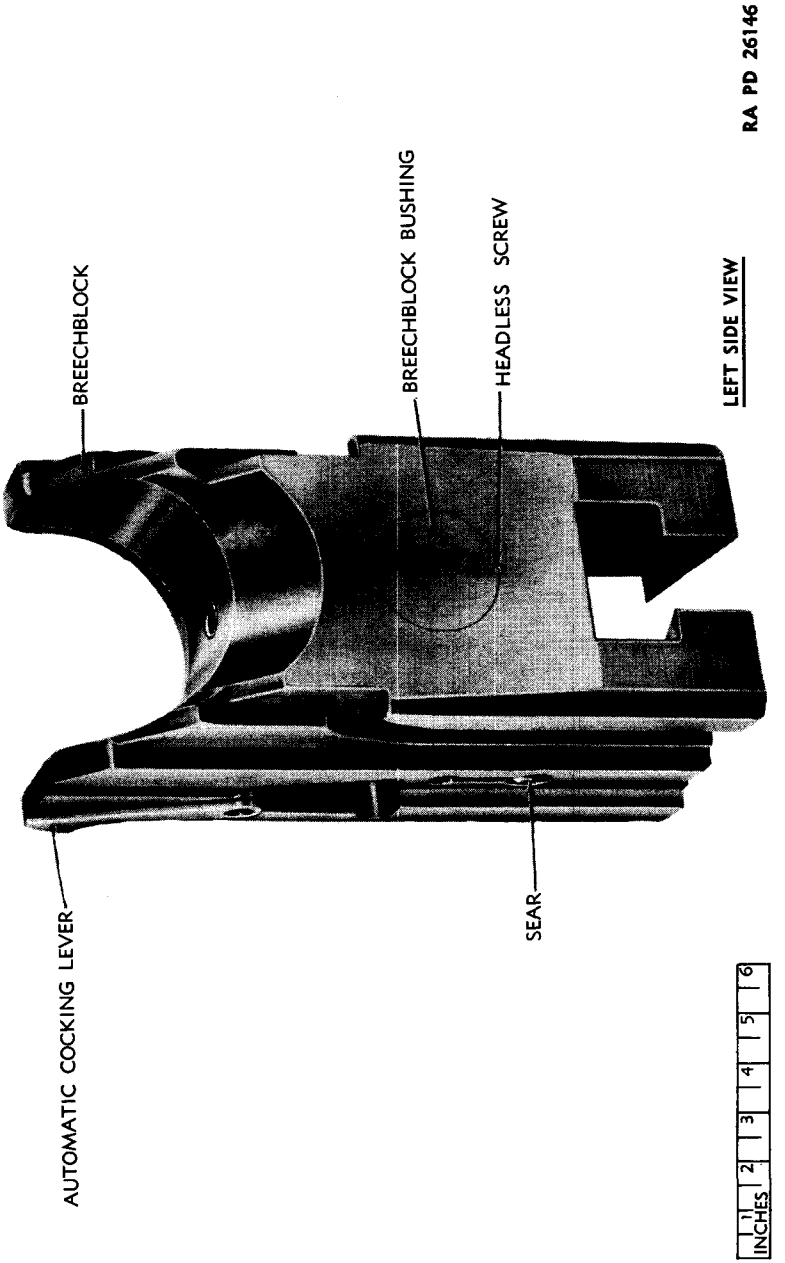

Figure 30 — Breechblock Assembly, Left Side

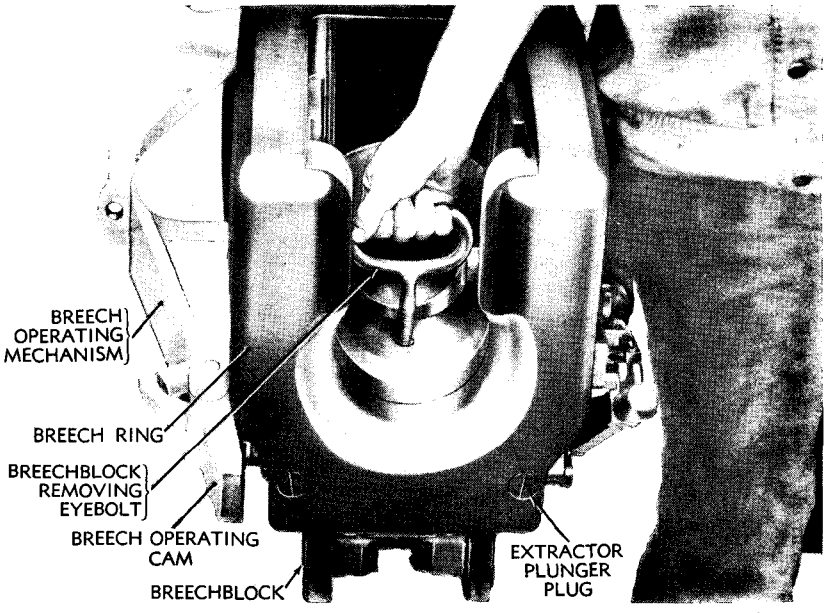

RA PD 59081

Figure 31 — Removing Breechblock From Breech Ring

lever to the rear of the shoulder at the right hand rear corner of the breechblock. Hold the extractors from below, guiding their inner trunnions into the extractor grooves of the breechblock. Lower the breechblock with the breechblock removing eyebolt until it is supported on the bottom of the U-slot of the breech ring. Replace extractor plunger springs and plugs. Insert the breech operating shaft from the right side, beveled end first, into the hub of the chain terminal crank and through the breechblock crank into the operating crank.

46. MAINTENANCE OF BREECHBLOCK.

a. Inspect the general condition of the breechblock. Clean all parts with dry-cleaning solvent. Check breechblock for scratches and other markings.

47. EXTRACTORS (fig. 32).

a. **General.** The extractors fit between the sides of the breechblock and the breech ring. The outer trunnion of each extractor projects into a slot in the breech ring which permits only horizontal motion. As the breechblock moves downward, the inner trunnions of the extractors slide in the grooves in the side of the breechblock.

90-MM GUN M3 MOUNTED IN COMBAT VEHICLES

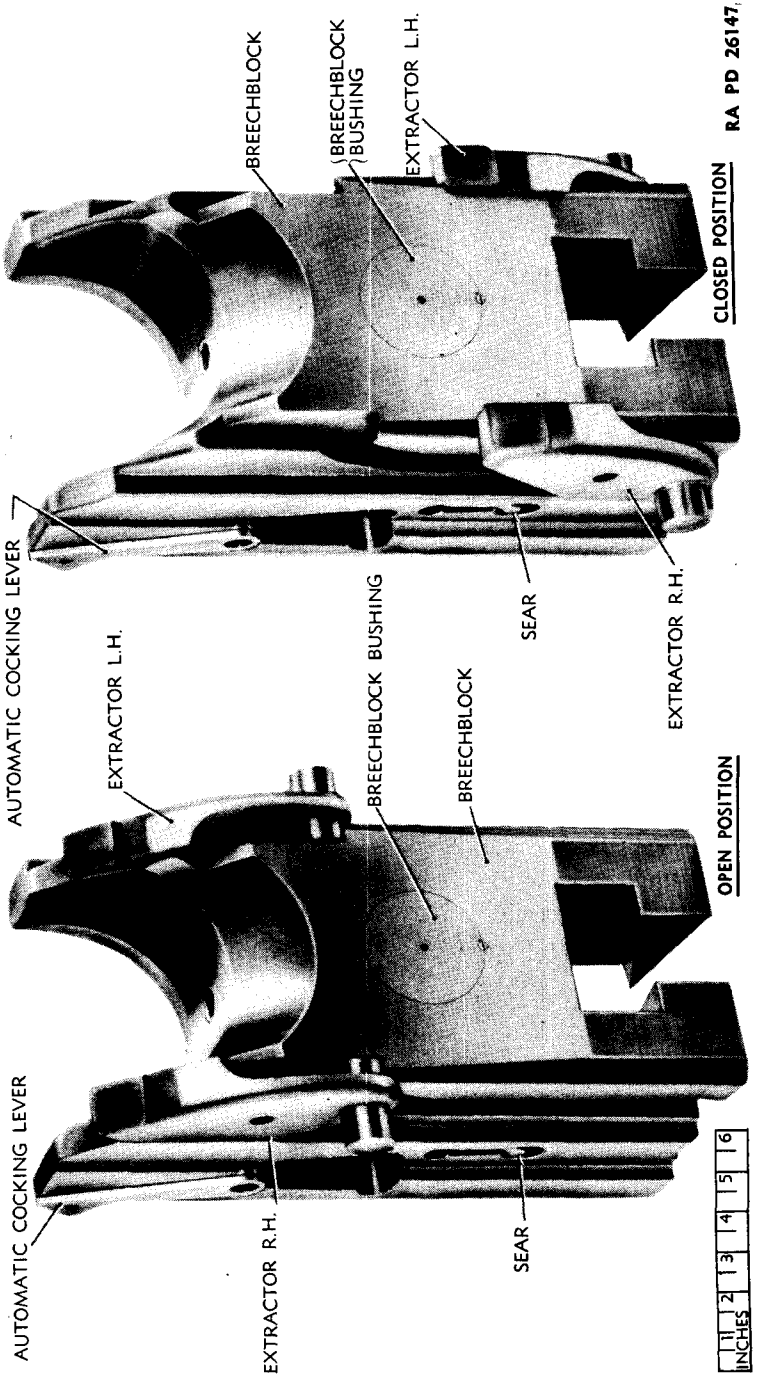

Figure 32 — Breechblock and Extractors

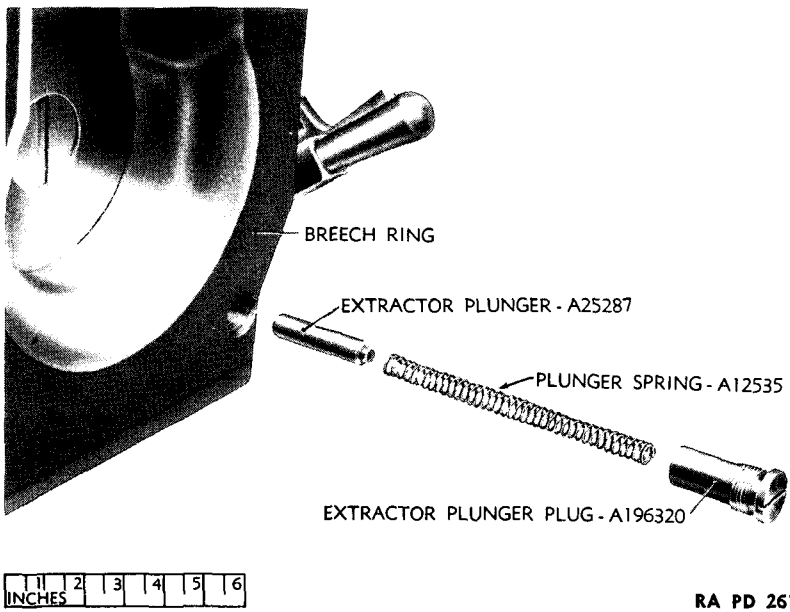

Figure 33 — Removing Extractor Plungers

b. Removal of Extractors. Remove right- and left-hand extractors from breech ring. If extractor plungers did not come out with the extractor plunger springs, they should now be pushed out to the rear.

c. Installation of Extractors. Install the right- and left-hand extractors by placing them in the breech ring.

d. Maintenance of Extractors. Clean extractors with dry-cleaning solvent before installing them into breech ring.

48. EXTRACTOR PLUNGERS (fig. 33).

a. General. The cylindrical extractor plungers are pressed forward against the outer trunnions of the extractors by means of the helical extractor plunger compression springs. Both plungers and springs are retained in the breech ring by threaded plugs which contain seats for the springs in their inner ends.

b. Removal of Extractor Plungers. Unscrew the extractor plunger plugs using care to prevent the extractor plunger springs from throwing the plugs to the rear. Remove the plugs, springs, and plungers.

c. **Installation of Extractor Plungers.** Place the small ends of the extractor plunger springs over the extractor plungers and insert both plungers and springs with the plungers forward. Screw in the extractor plunger plugs.

d. **Maintenance of Extractor Plungers.** Clean the extractor plunger, plunger springs, and extractor plunger plug with dry-cleaning solvent before installing in breech ring.

49. BREECH OPERATING SHAFT.

a. **General.** The breech operating shaft fits into the splined hubs of the operating crank, breechblock crank, and chain terminal crank, so that all three cranks will operate as a unit. There is a hole in the lower end of the shaft for attachment of the breech operating handle by means of a screw.

b. **Removal of Breech Operating Shaft** (fig. 35). Remove locking pin and operating crank detent from operating crank. Pull out breech operating handle and breech operating shaft from breechblock crank and operating crank. Then remove chain terminal crank.

c. **Installation of Breech Operating Shaft.** Replace chain terminal crank. Insert breech operating shaft and breech operating handle from right-hand side, beveled end first, into hub of operating crank through breechblock crank, and insert locking pin into operating crank and operating crank detent into breech operating shaft.

d. **Maintenance of Breech Operating Shaft.** Clean breech operating shaft with dry-cleaning solvent. Check shaft for scratches or other markings before installing into breech ring.

50. BREECHBLOCK CRANK.

a. **General.** The breechblock crank is actuated and supported by the breech operating shaft which passes through it. The cylindrical pivot pin is located at the outer end of the crank arm and projects on either side to carry the breechblock crossheads which slide in the T-slot of the breechblock.

b. **Removal of Breechblock Crank** (fig. 34). Remove locking pin from operating crank and operating crank detent. Pull out breech operating shaft and operating handle while holding breechblock crank from falling. Then remove breechblock crank from breech ring.

c. **Installation of Breechblock Crank.** Insert breechblock crank into T-slot of breech ring. Insert breech operating shaft and breech operating handle through breechblock crank into hub of operating crank.

BREECH MECHANISM

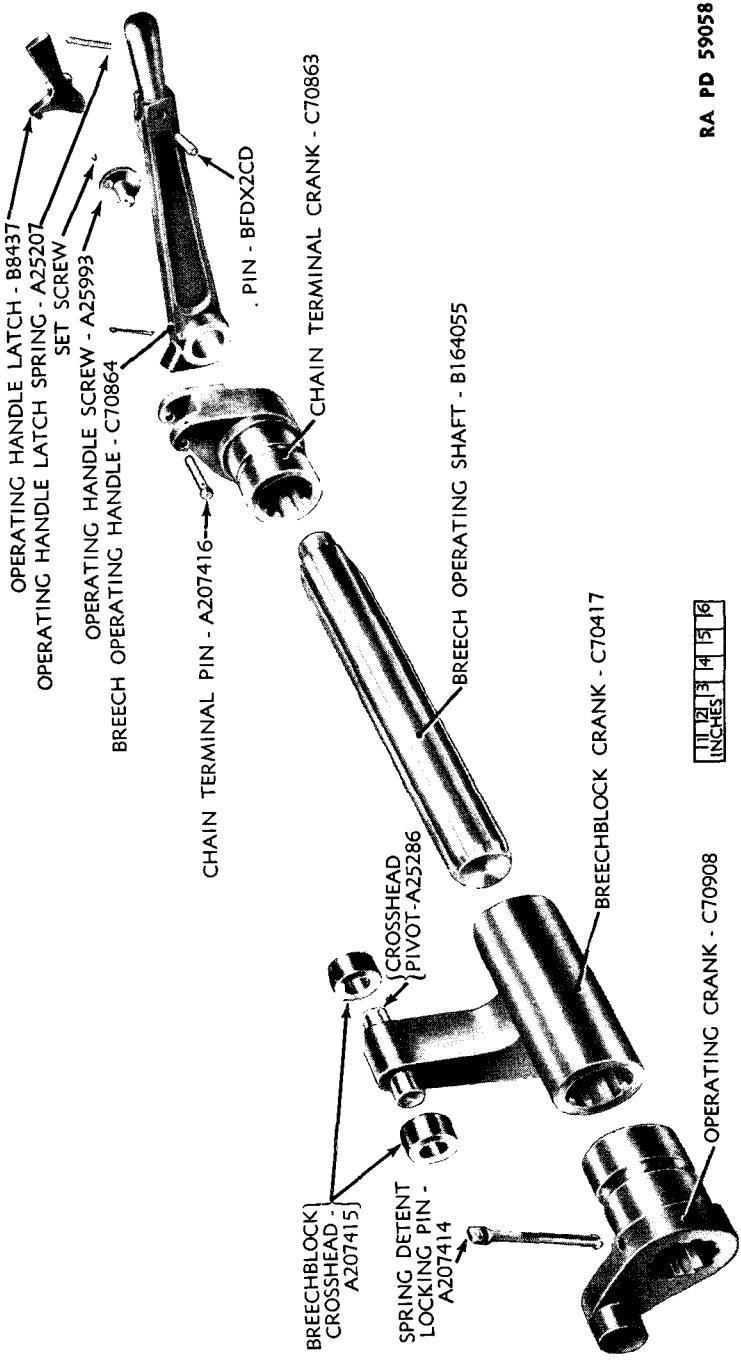

Figure 34 — Breech Operating Shaft Group — Exploded View

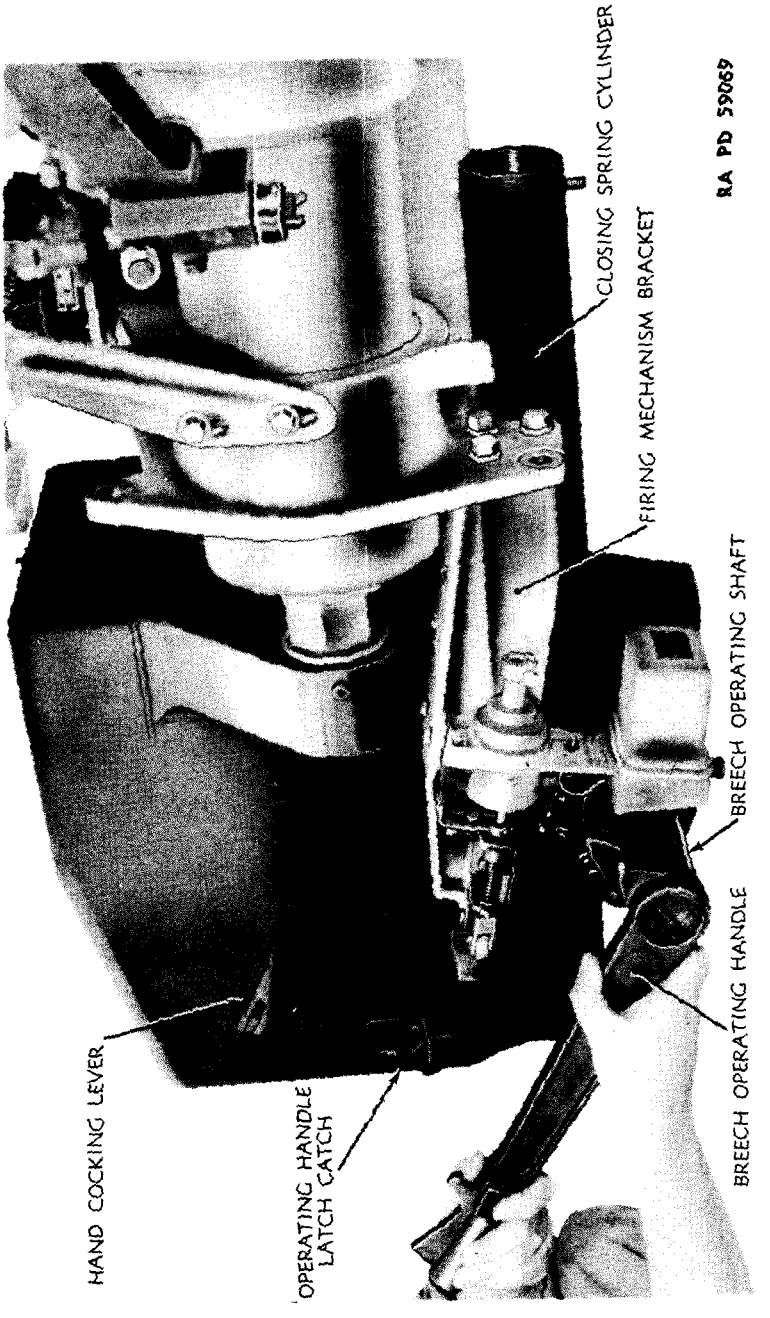

Figure 35 — Removing Breech Operating Shaft and Operating Handle

BREECH MECHANISM

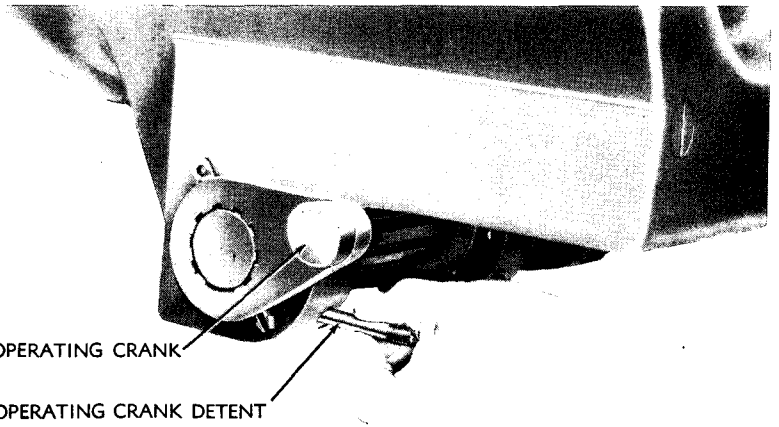

RA PD 59115

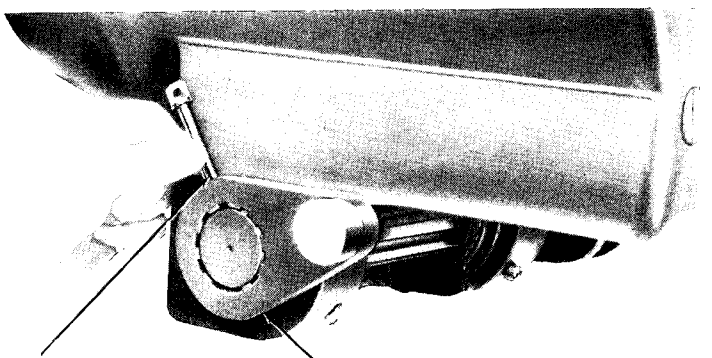

RA PD 59114

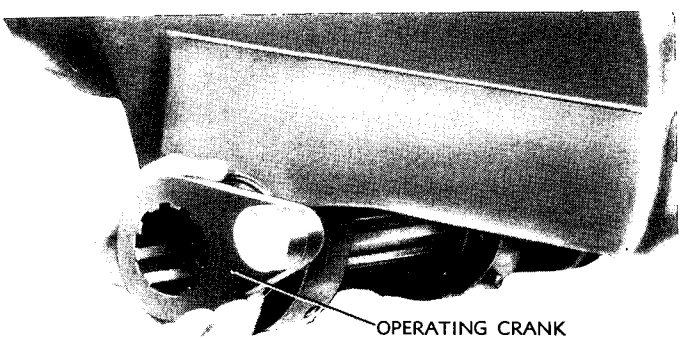

RA PD 59065

Figure 36 — Removing Operating Crank

51. OPERATING CRANK.

a. General. The operating crank consists of a splined hub on the interior and a cylindrical machined surface on the exterior.

b. Removal of Operating Crank (fig. 36). Remove operating crank detent from breech ring. Then remove spring detent locking pin from operating crank and remove operating crank from breech operating shaft.

c. Installation of Operating Crank. Place operating crank on beveled end of breech operating shaft and insert spring detent locking pin into operating crank. Then insert operating crank detent.

d. Maintenance of Operating Crank. Check operating crank for scratches and other markings on the splined hub part of the crank. Clean with dry-cleaning solvent before installing.

52. CHAIN TERMINAL CRANK (fig. 34).

a. General. The chain terminal crank consists of a hub with a short heavy crank arm or lever on its lower end. The end of the arm is slotted and drilled for attachment of the chain terminal. The splined interior of the hub receives the breech operating shaft while the cylindrical exterior is supported in a bushing in the vertical bore of the breech ring.

b. Removal of Chain Terminal Crank. Remove breech operating handle, then remove chain terminal pin and remove chain terminal crank.

c. Installation of Chain Terminal Crank. Install chain terminal crank and insert chain terminal pin into crank on breech operating shaft.

d. Maintenance of Chain Terminal Crank. Check chain terminal crank for damage. Clean with dry-cleaning solvent. Lubricate chain cable before installing.

Section XV

CLOSING SPRING CYLINDER

53. CLOSING SPRING CYLINDER (fig. 37).

a. General. The closing spring cylinder is supported by a bracket welded to the bottom side of the breech ring immediately forward from the chain terminal crank. The closing spring piston rod is attached to the chain terminal crank by means of the cable chain which draws the piston rearward against closing spring, when the breech is opened.

CLOSING SPRING CYLINDER

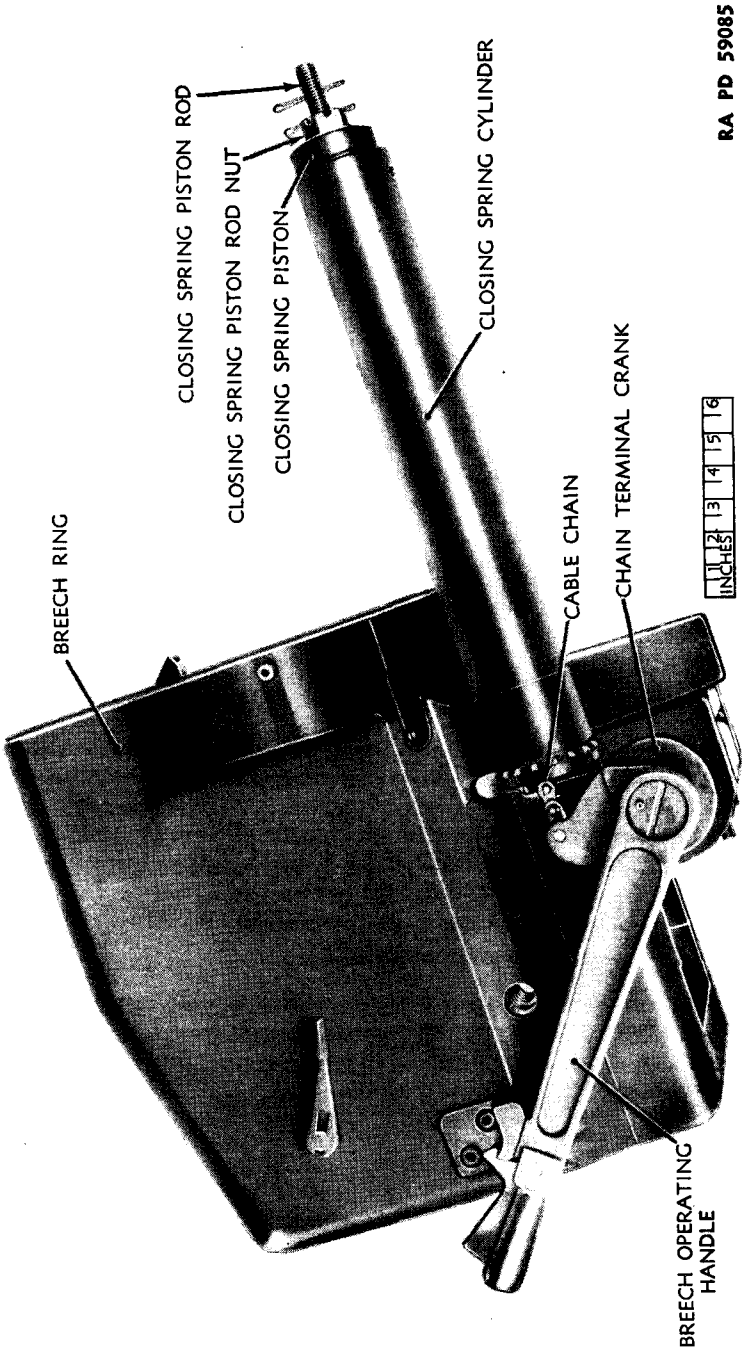

Figure 37 — Closing Spring Mechanism Adjustment

b. The closing spring piston rod is slotted and drilled at one end for attachment to the cable chain by means of a link pin. A series of holes equally spaced is drilled along the threaded portion of the rod so that the piston rod nut can be prevented from unscrewing at various positions of adjustment by means of a cotter pin.

c. The closing spring piston fits into the closing spring cylinder bore freely. A hole in the center provides a loose fit for the piston rod. A recess at one end forms a seat for the piston rod nut, while a shoulder at the other end provides a seat for the closing spring.

d. The closing spring piston rod nut is a hexagonal nut with a special flange having a convex surface which fits into the concave recess of the piston to provide a flexible joint.

e. **Adjustment of Closing Spring Cylinder** (fig. 37). Approximate adjustment of the closing spring is obtained by tightening the closing spring piston rod nut until four cotter pin holes are shown on piston rod. Accurate adjustment is then made by trial. Open the breech. Trip the extractors with an empty shell case or a suitable block of wood. If the breechblock does not fully close or action is sluggish, tighten the nut one cotter pin hole at a time until proper adjustment is reached. If the breechblock closes too fast, loosen the nut one cotter pin hole at a time until correct adjustment is obtained.

Section XVI

PERCUSSION MECHANISM

54. PERCUSSION MECHANISM.

a. **General.** The firing pin guide is a cylindrical cup which slides forward and backward in center of bore of the breechblock with its closed end forward. It carries the firing pin retracting spring, firing spring stop and the forward end of the firing spring, and firing pin. The larger of exterior lugs on the bottom side of the guide serves for engagement with the sear.

b. The firing pin is a shouldered screw with cylindrical body, slotted head, and flat point. It is screwed into the forward end of the firing pin guide and secured by means of a straight drill rod pin.

c. The firing spring stop, which has the form of a ring with two prongs protruding from its front face, fits freely in the annular space

PERCUSSION MECHANISM

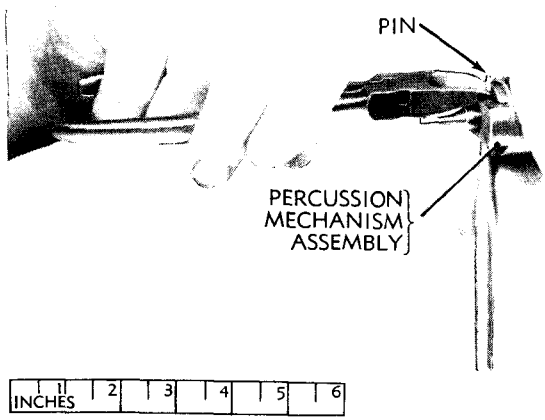

RA PD 59075

Figure 38 — Removing Pin From Percussion Mechanism

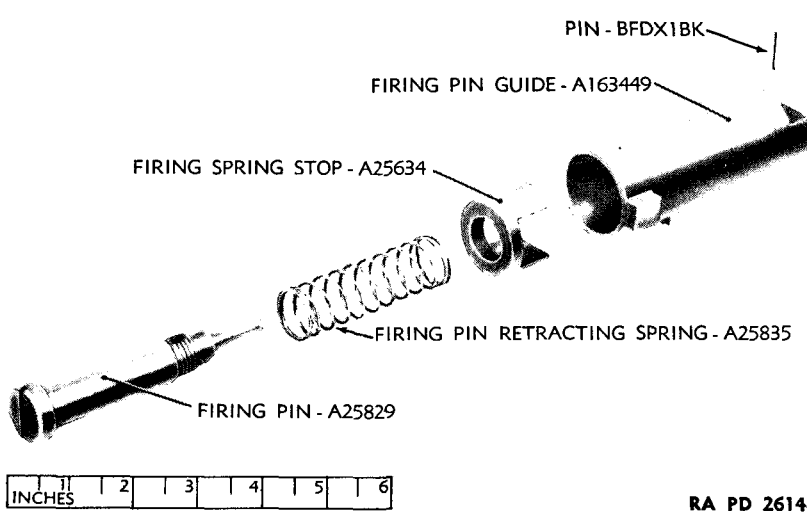

RA PD 26148

Figure 39 — Percussion Mechanism — Exploded View

between the body of the firing pin and the interior surface of the guide with its prongs extending forward through the openings in the end of the guide.

d. The firing pin retracting spring is a compression spring mounted on the body of the firing pin. It bears rearward on the firing pin head and forward on the firing pin stop, pressing the stop against forward end of stop.

e. Removal of Percussion Mechanism (figs. 39 and 40). Press firing spring retainer one-eighth turn and firing spring will push the retainer out. Then remove percussion mechanism assembly from breechblock.

f. Installation of Percussion Mechanism. Insert percussion mechanism assembly in its recess on the rear face of the breechblock with the guide lug and sear lug in alinement with the grooves in the right of the recess. Replace firing spring and then the firing spring retainer. The retainer is in the locked position when the arrow coincides with the groove in the retainer.

g. Maintenance of Percussion Mechanism. After removal, all parts should be cleaned thoroughly and inspected for conditions that will affect their proper functioning. Check for scratches, burs, and rust. If any parts of the percussion mechanism assembly are worn, replace parts. Correct before installing by cleaning with dry-cleaning solvent, and wipe dry.

55. FIRING SPRING.

a. General. The firing spring is a compression spring which extends into the firing pin guide from the rear in the annular space between the retracting spring and the interior surface of the guide. Its forward end bears against the firing spring stop, and the rear end seats in the recess of the firing spring retainer.

56. FIRING SPRING RETAINER.

a. General. The firing spring retainer is a cylindrical plug which closes the rear end of the central bore in the breechblock. Its inner end, besides being recessed axially to form a seat for the firing spring, carries two segmental lugs which engage two recesses in the breechblock to lock the retainer in place. The rear face of the retainer is slotted to be able to turn with fingers; and is marked with an arrow on the right horizontal center line as an aid in assembly and disassembly.

b. Removal of Firing Spring Retainer and Firing Spring (fig. 40). See paragraph 54 e.

PERCUSSION MECHANISM

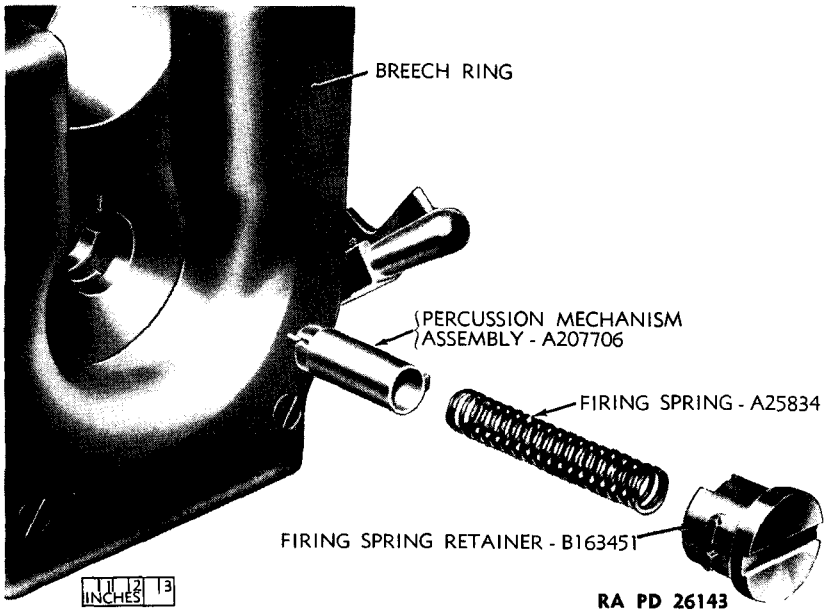

Figure 40 — Removing Firing Spring Retainer and Firing Spring

c. **Installation of Firing Spring Retainer and Firing Spring.** See paragraph 54 f.

d. **Maintenance of Firing Spring Retainer and Firing Spring.** Check for burs and scratches on the retainer. Clean materiel with dry-cleaning solvent. Test the tension of the spring before installing into breechblock. If firing spring is worn, replace spring.

57. SEAR.

a. **General.** The sear is a cylindrical rod which slides horizontally into the breechblock across the sear lug of the firing pin guide. It is notched on the top for engagement and release of the sear lug of the firing pin guide. It has a reduced diameter on the front end to receive the sear spring. The upper end of the sear is grooved to receive the sear retainer. The lower end of the sear is formed into a downward projecting arm which goes into a recess in the breechblock to prevent rotation, and provides a contact surface for the firing plunger.

b. **Removal of Sear** (fig. 41). Remove breechblock from breech ring (par. 42). Then press the firing spring retainer inward and turn 45 degrees. The force of the firing spring will push the firing spring

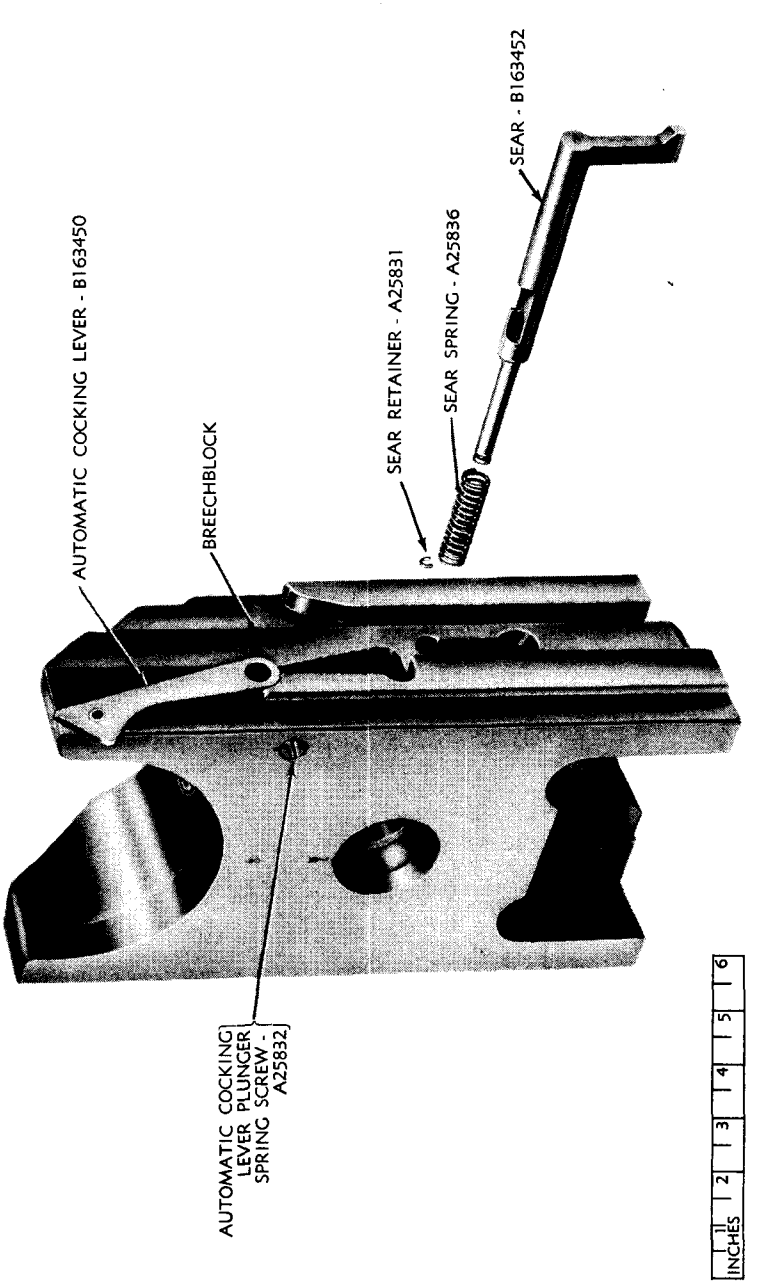

RA PD 59061

Figure 41 — Removing Sear and Sear Spring

retainer out. Push sear and remove sear retainer. Then pull sear and sear spring from the side of breechblock.

c. **Installation of Sear.** Insert sear spring on sear and place sear and sear spring into the side of breechblock. Then push sear against tension of spring and replace sear retainer. Then replace firing spring and firing spring retainer.

d. **Maintenance of Sear.** Check the sear for burs and other defects. Clean with dry-cleaning solvent before installing in breechblock.

58. AUTOMATIC COCKING LEVER.

a. **General.** The automatic cocking lever has a shaft which projects into the upper right-hand side of the breechblock. The lever has an upper and lower arm. The lower arm engages the cocking lug on the right side of the firing pin guide and returns it to firing position. The upper arm fits between the breechblock and breech ring and engages the hand cocking lever.

b. **Removal of Automatic Cocking Lever** (fig. 42). Unscrew automatic cocking lever plunger spring screw and spring from the rear face of the breechblock. Then remove automatic cocking lever and plunger from side of breechblock.

c. **Installation of Automatic Cocking Lever.** Insert automatic cocking lever plunger and automatic cocking lever inside of breechblock. Then replace spring and automatic cocking lever plunger spring screw.

d. **Maintenance of Automatic Cocking Lever.** After disassembly, clean all parts with dry-cleaning solvent. Check all parts for burs, scratches, and other defects that might hinder proper functioning.

59. FIRING PLUNGER.

a. **General.** The firing plunger is cylindrical in form with a collar near its middle. It is contained in a hole bored through the bottom side of the breech ring. Its long inner end is alined with the contact surface of the sear when the breechblock is in closed position. The outer round portion of the plunger is so located to make contact with the firing mechanism on the mount. The plunger is retained in the breech ring by the firing plunger retainer which screws in around the firing plunger.

b. **Removal of Firing Plunger** (fig. 44). Remove firing mechanism group assembly by unscrewing three nuts from mount. Then unscrew firing plunger retainer from breech ring with a spanner wrench. Then pull firing plunger out of breech ring.

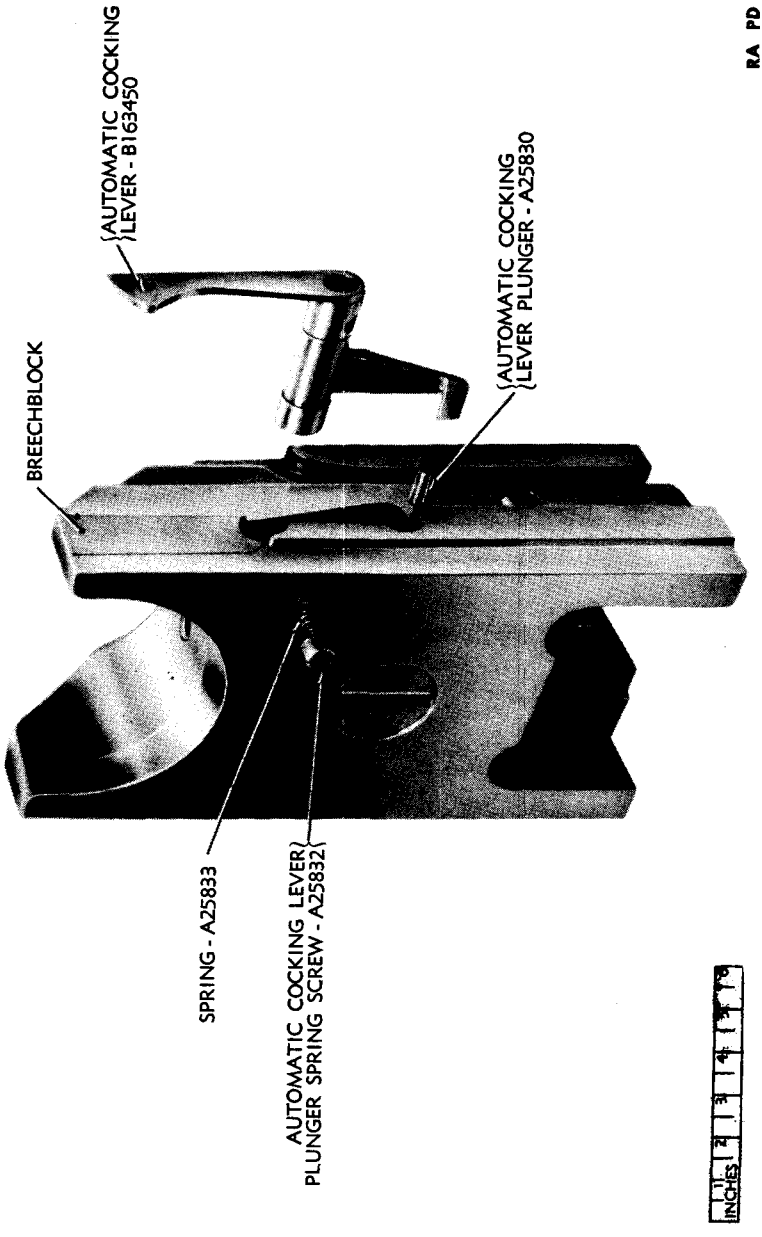

Figure 42 – Removing Cocking Lever

c. **Installation of Firing Plunger.** Place firing plunger in breech ring. Then screw firing plunger retainer in breech ring.

d. **Maintenance of Firing Plunger.** Clean all parts with dry-cleaning solvent and inspect plunger for nicks, burs, pitting, and other conditions that affect its proper functioning.

Section XVII

GUN RECOIL GUARD

60. GUN RECOIL GUARD (fig. 43).

a. **General.** The gun recoil guard is attached to the mount to serve as a protection to the occupants of the turret. The guard is made of sheet steel and welded. It has threaded rods on each end which can be inserted in the cradle and bolted.

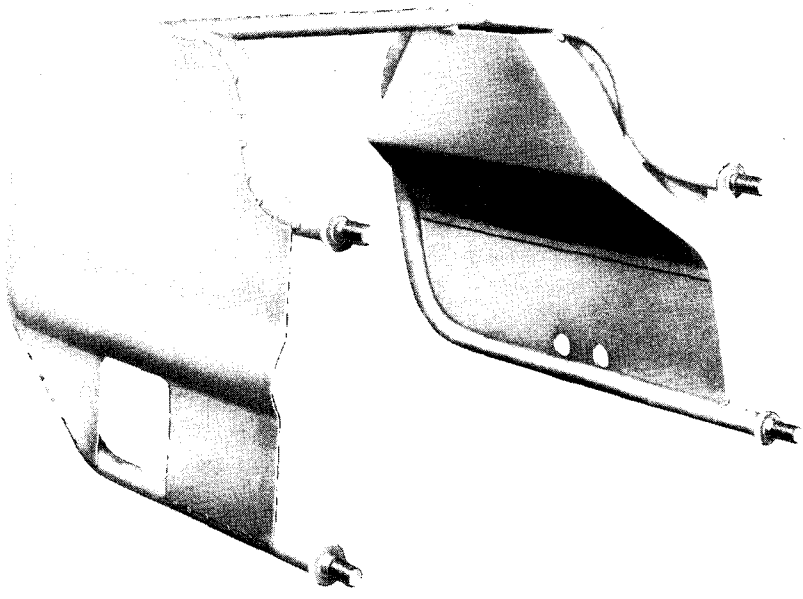

RA PD 59064

Figure 43 — Gun Recoil Guard — 90-mm Gun M3

b. Removal of Gun Recoil Guard (fig. 9). Unscrew four nuts and washers that secure the gun recoil guard to the cradle with wrench, and pull guard away from cradle.

c. Installation of Gun Recoil Guard. Insert the gun recoil guard into the cradle and tighten the nuts.

Section XVIII

FIRING MECHANISM

61. FIRING MECHANISM (figs. 44 and 45).

a. General. Included in this group is the firing solenoid, conduit relay box, firing safety lock assembly, firing mechanism plunger, and firing trigger. The firing mechanism is attached to a firing mechanism bracket which is held on the cradle tube bracket by three screws. The firing solenoid is attached to the firing mechanism bracket by two cap screws. The center part of firing trigger is connected to the firing mechanism bracket by a firing trigger pin. The end of the firing trigger is attached to the clevis by the clevis pin, in such a way, that when rotated, it can contact the firing plunger in the breech ring. The firing mechanism plunger and compression spring are attached to the clevis and are inserted through the holes in the bracket of the firing safety lock assembly. The head of the firing mechanism plunger thus makes contact with the firing solenoid.

b. Replace Firing Solenoid. Make sure the battery switch is in open position. Remove the two nuts from the conduit relay box. Disconnect electrical relay from the singular pole inside box. Installation is the reverse of removal. After solenoid is installed, adjust firing mechanism.

c. Manual Firing Pedal. Remove the bolts securing the firing pedal from the floor of the turret, and then remove pin out of firing lever and pull pedal off. Installation is the reverse of removal (fig. 23).

FIRING MECHANISM

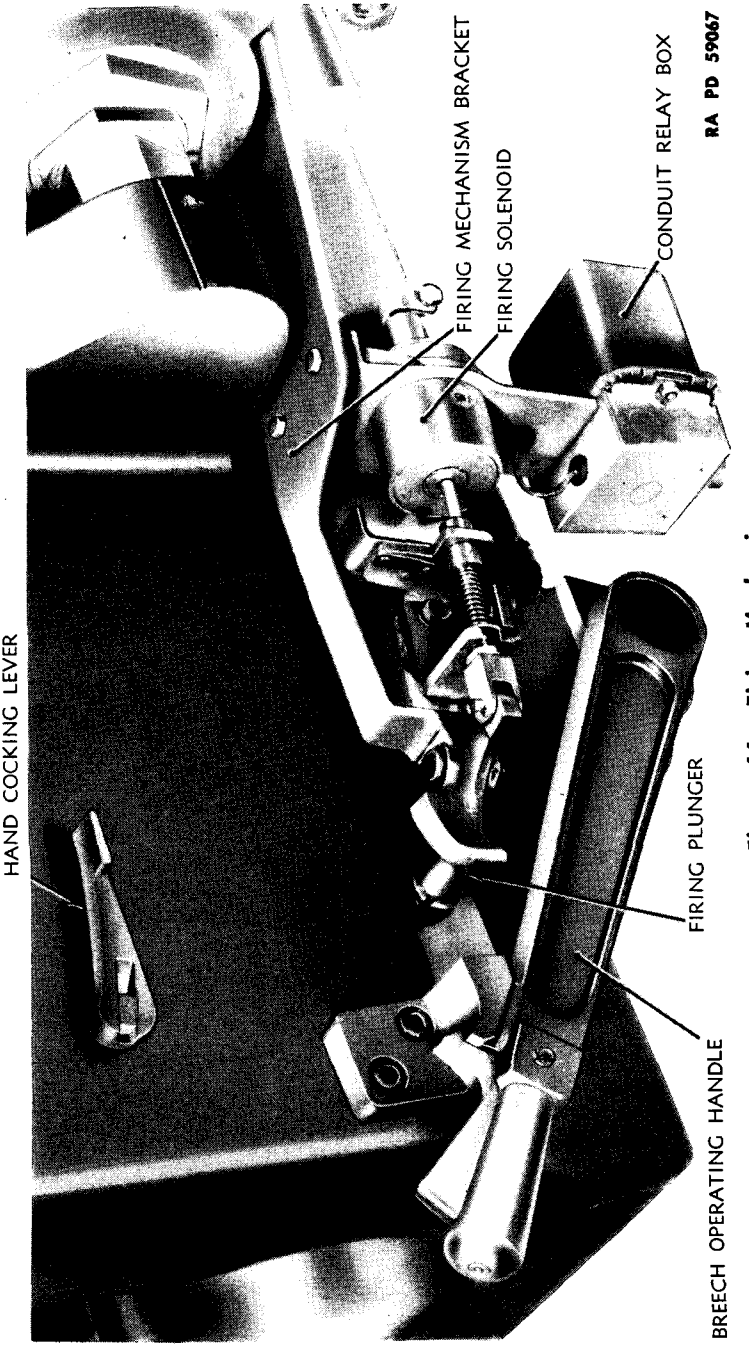

Figure 44 — Firing Mechanism

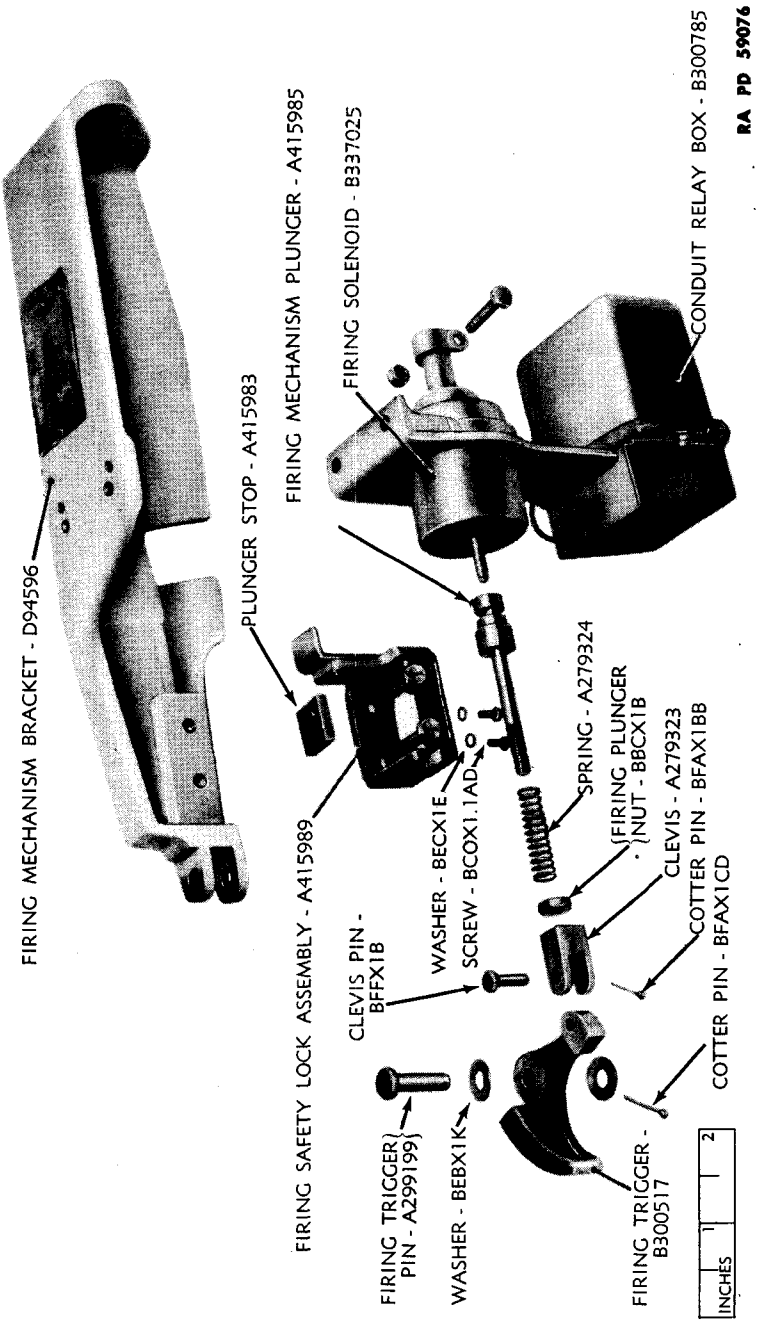

Figure 45 — Firing Mechanism — Exploded View

FIRING MECHANISM

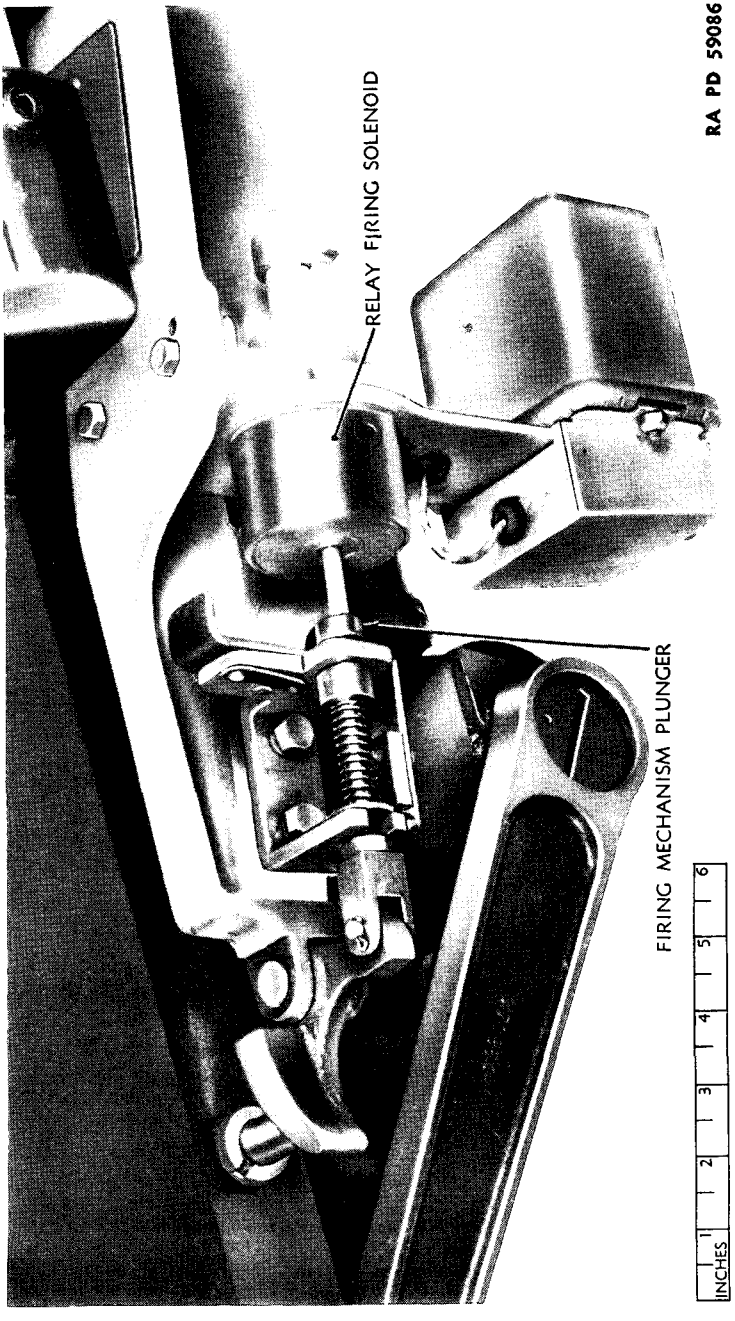

RA PD 59086

Figure 46 — Adjustment of Solenoid Plunger

90-MM GUN M3 MOUNTED IN COMBAT VEHICLES

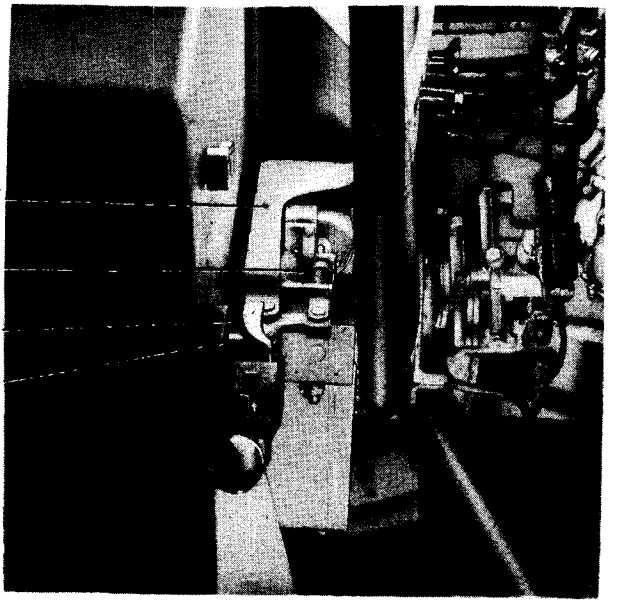

RA PD 59087

Figure 47 — Firing Mechanism Installed in Vehicle

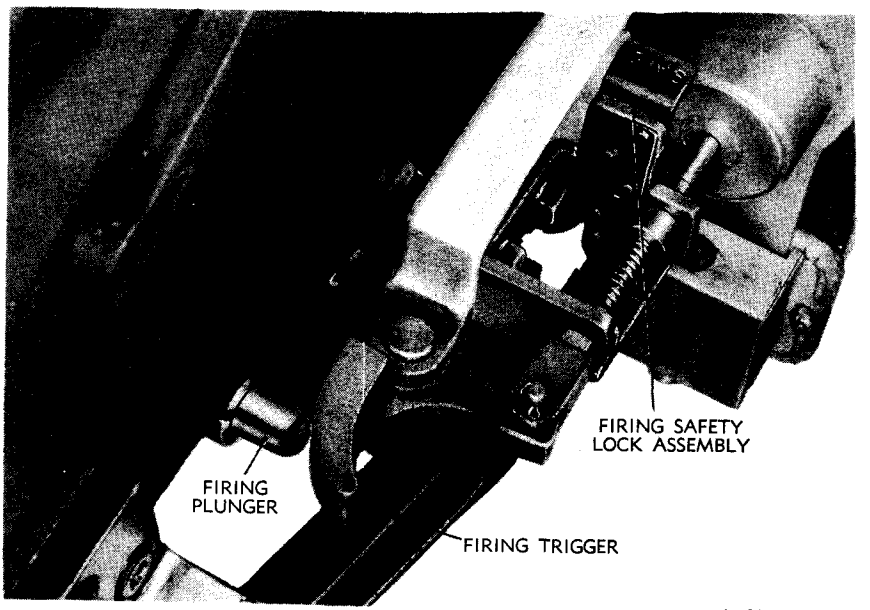

RA PD 59083

Figure 48 — Firing Mechanism Adjustment

d. **Adjustment of Firing Mechanism** (fig. 48). Adjust the clevis which holds the end of firing trigger to give a $\frac{1}{32}$-inch clearance between the end of the firing plunger and the contact surface of the firing trigger.

Section XIX

BREECH OPERATING MECHANISM

62. BREECH OPERATING MECHANISM.

a. **General.** This mechanism is made up of breech operating cam, breech operating cam spring with inner and outer retainers, breech operating cam pin, two lock screws, and breech operating cam bracket.

b. **Removal of Breech Operating Mechanism** (figs. 48 and 49). Remove gun recoil guard, paragraph 60. Remove four bolts from cradle bracket which holds breech operating mechanism. Unscrew two set screws, thus removing breech operating cam pin from breech operating cam bracket, then remove breech operating cam retainers and breech operating spring.

c. **Installation of Breech Operating Mechanism.** Install breech operating cam in breech operating cam bracket by inserting the breech operating pin and the two set screws. Replace retainers and breech operating spring between the arm of breech operating cam and the seat of the breech operating cam bracket.

d. **Maintenance of Breech Operating Mechanism.** Check all parts for nicks, pitting, burs, and rust. Clean all parts with dry-cleaning solvent before assembling.

Section XX

FIRING SWITCH BOX AND FIRING TRIGGER

63. FIRING SWITCH BOX.

a. **General.** There are two foot-operated firing switches mounted in a switch box on the turret floor convenient for the gunner. The right switch operates the 90-mm solenoid, and the left one, the caliber .30 machine gun solenoid.

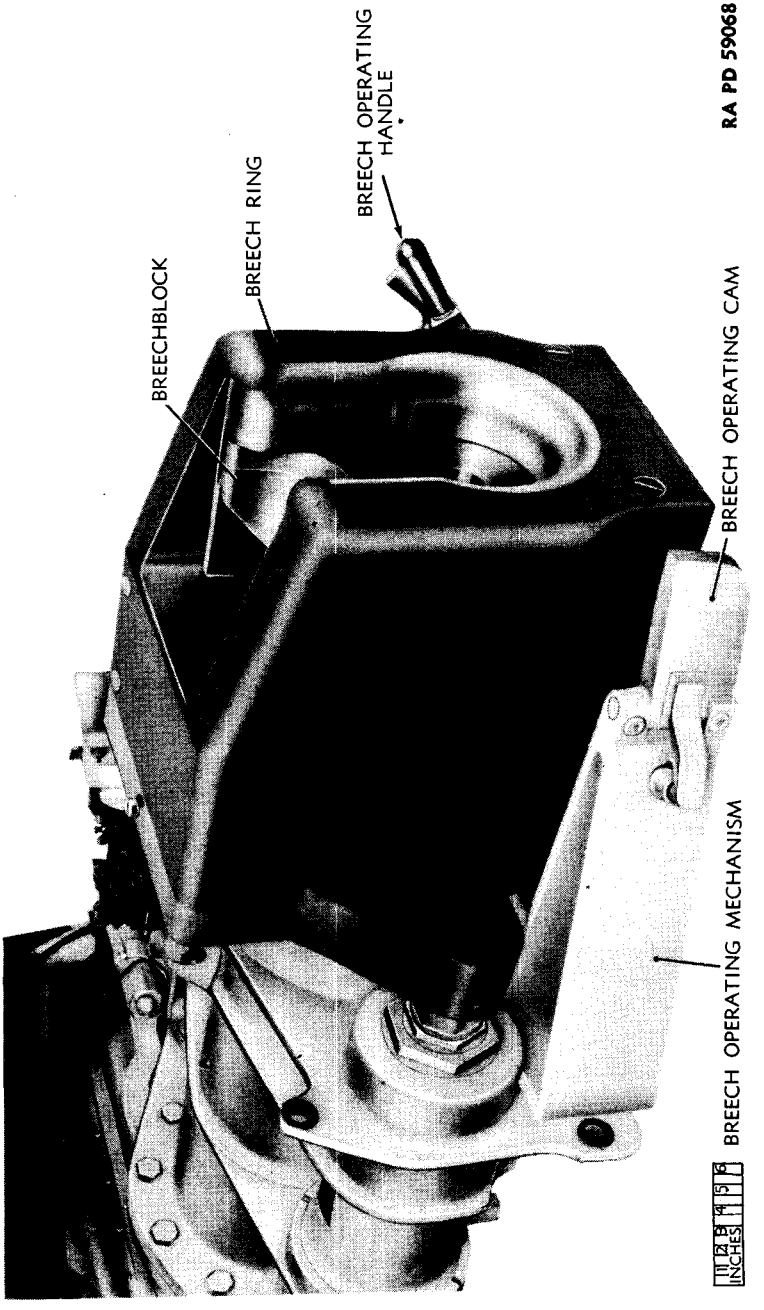

Figure 49 — Breech Operating Mechanism — Installed

FIRING SWITCH BOX AND FIRING TRIGGER

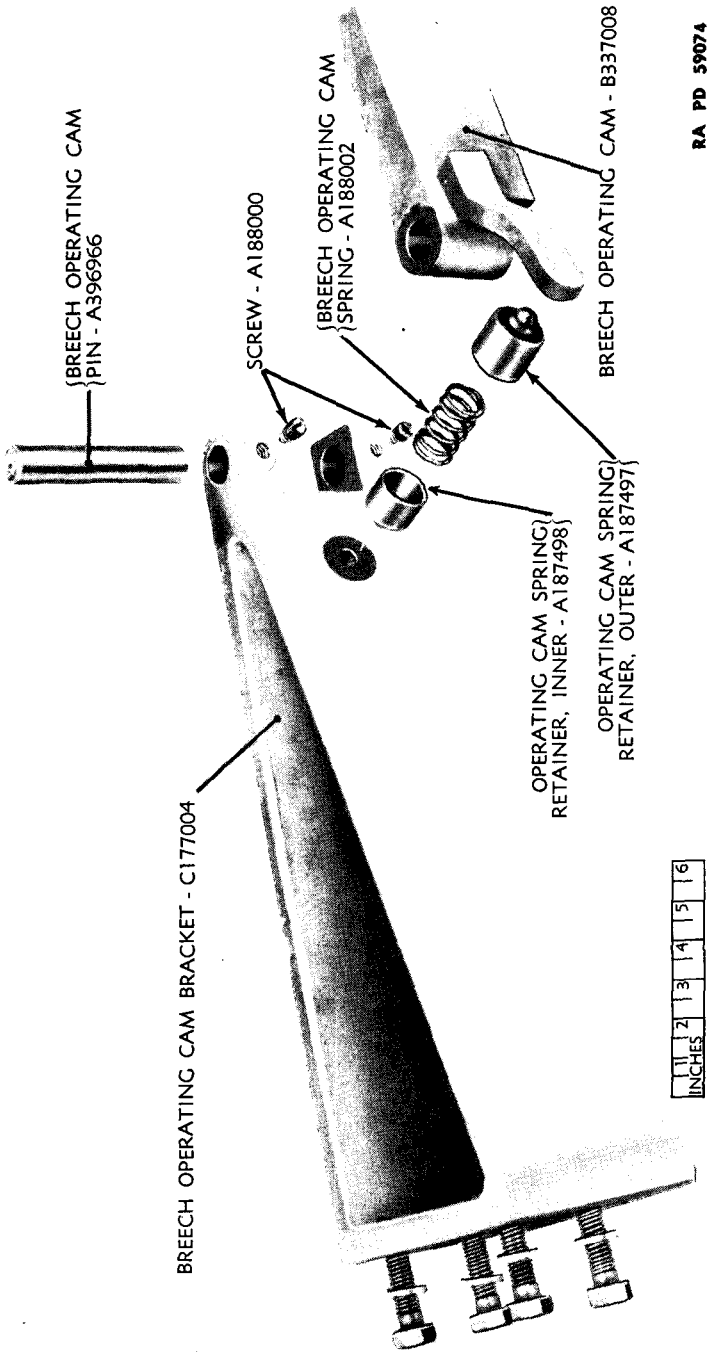

Figure 50 — Breech Operating Mechanism — Exploded View

b. Removal of Firing Switch Box (fig. 23). Remove four screws that secure the switch box to the turret floor and then remove from hinges. Installation is the reverse of removal.

64. FIRING TRIGGER (FINGER FIRING SWITCH).

a. General. The firing trigger, or finger firing switch, is located on the power traverse control handle. This firing trigger operates the 90-mm gun electrically in both the 90-mm Motor Carriage T71 (M36) and the Tanks T25E1 and T26E1.

Section XXI

RECOIL CYLINDERS

65. RECOIL CYLINDERS ON GUN MOUNT T8 (M4) AND COMBINATION GUN MOUNTS T99, T99E1, AND T99E2.

a. Filling Recoil Cylinders.

(1) TESTING FOR WATER IN RECOIL OIL. To test recoil oil for presence of water, the following procedure may be used:

(a) Fill a clean, pint glass bottle with recoil oil and allow to settle. Invert the bottle and hold it up to the light. If water is present, drops or bubbles may be seen sinking slowly in the oil. Oil that is cloudy indicates presence of moisture.

(b) A better test, if practicable, is to fill a shallow pan with oil and heat to 212° F. If water is present, tiny bubbles will appear on the surface.

(2) To fill recoil cylinders on the Gun Mount T8 and Combination Gun Mounts T99, T99E1, and T99E2, set gun at zero elevation and remove top filling plugs at front and rear ends of cylinders. Pour in recoil oil until level comes up to the bottom of plug holes. Tap cylinders with block of wood to drive out any air bubbles that may be in the cylinders. Replace plugs at forward end. Depress the gun 5 degrees and allow oil to run out of the holes at the rear end. Replace plugs at the rear end of cylinders.

RECOIL CYLINDERS

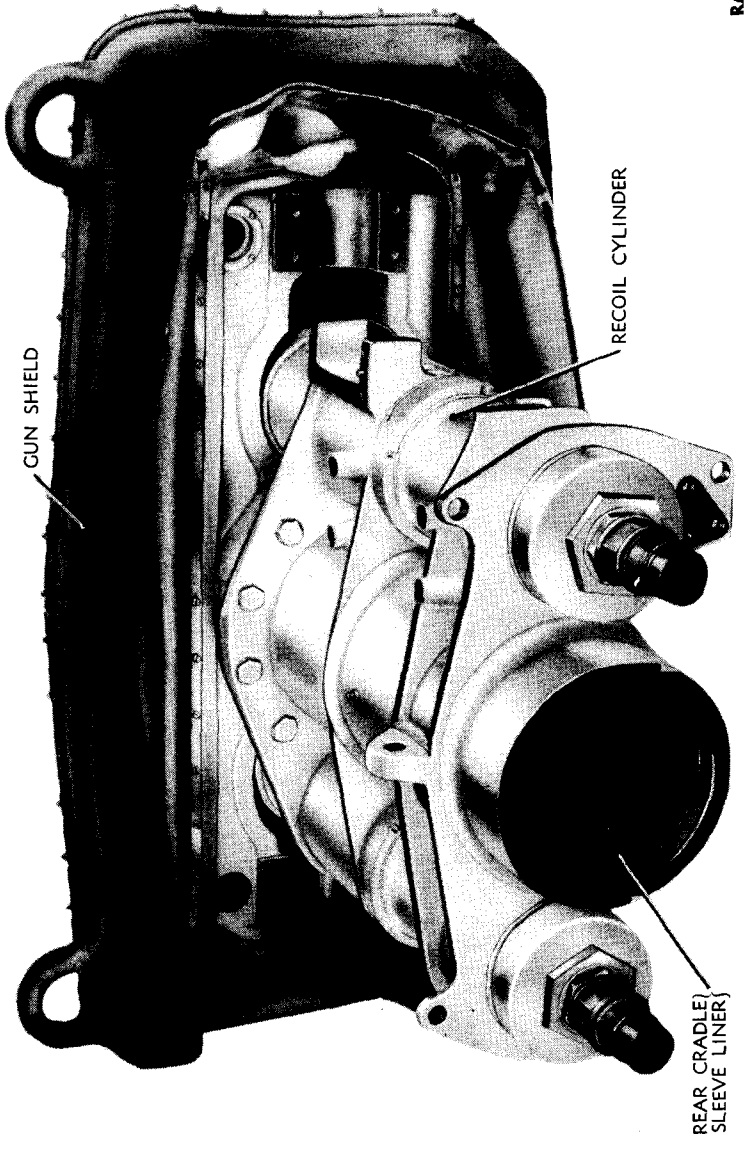

Figure 51 — Recoil Cylinders Installed in Combination Gun Mount T99

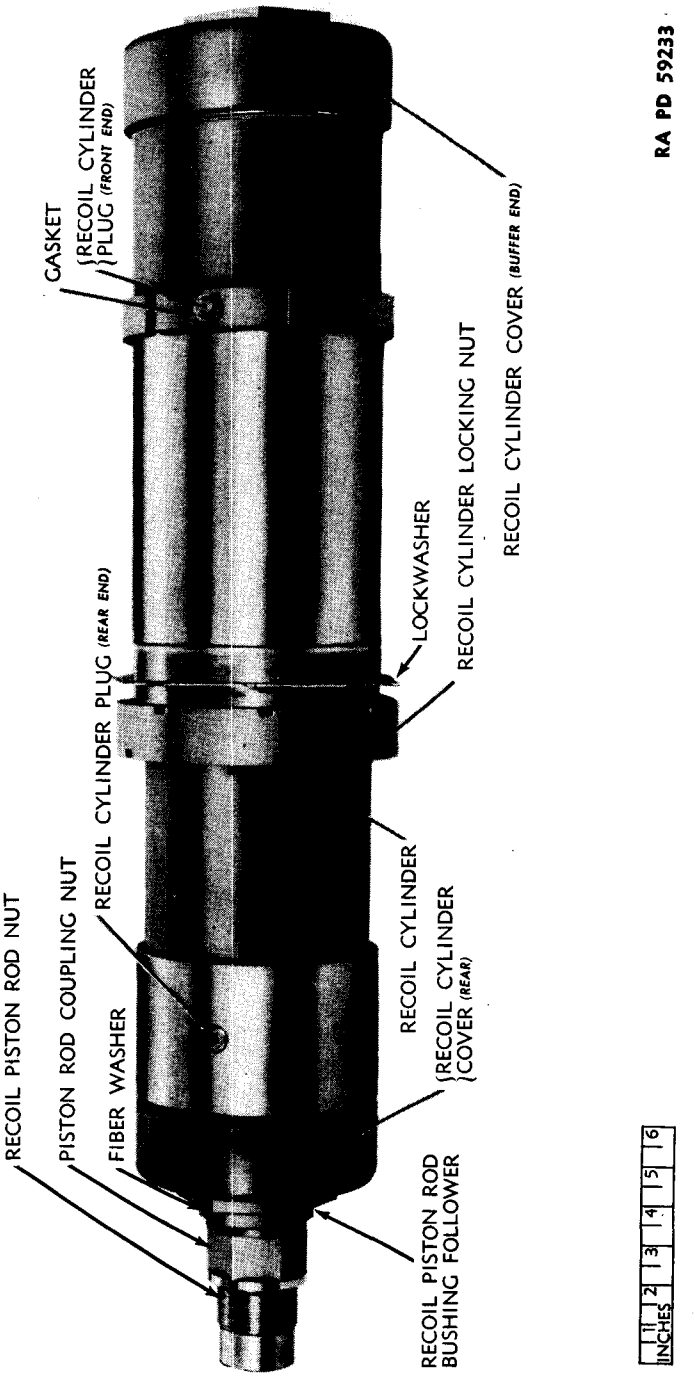

Figure 52 — Recoil Cylinder Assembly

RECOIL CYLINDERS

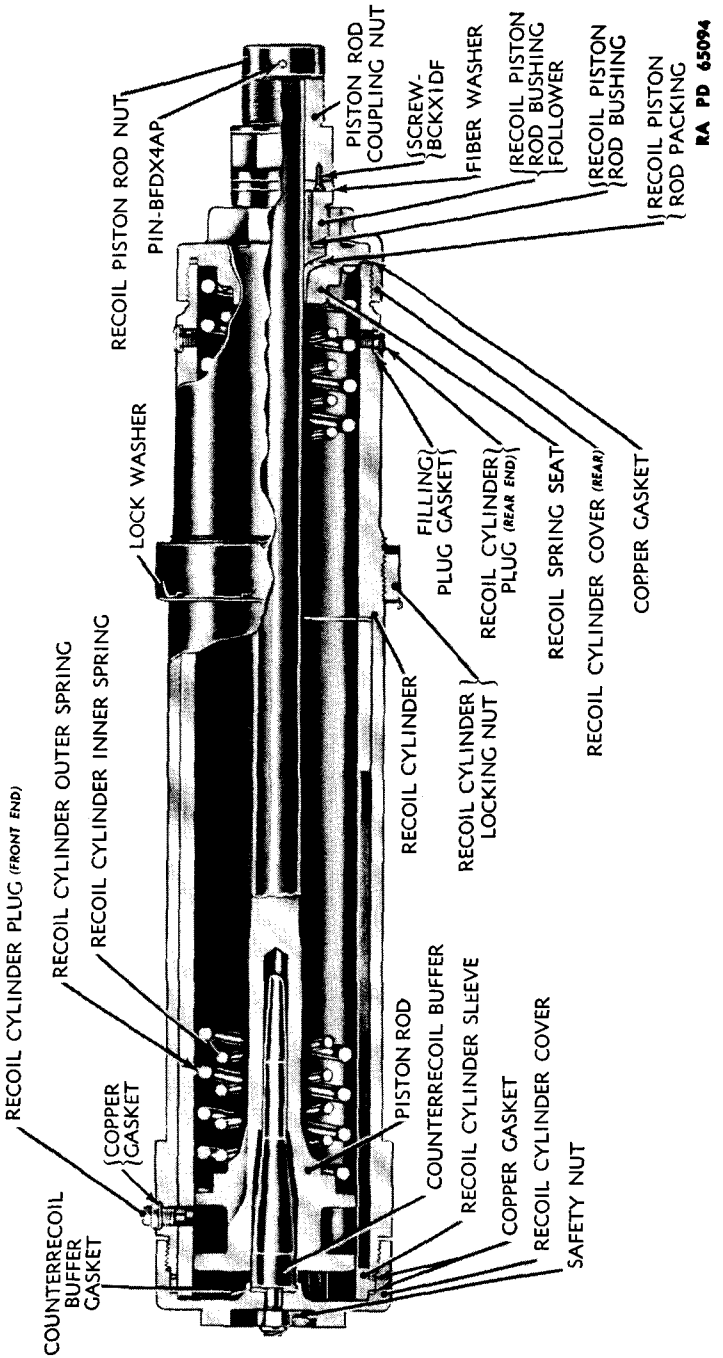

Figure 53 — 90-mm Gun Mount T8 (M4) and Combination Gun Mounts T99, T99E1, and T99E2

b. Check Oil Level in Recoil Cylinder. To check oil level, depress gun 5 degrees and remove the top plug at the rear of each cylinder. The oil level in the cylinder should reach bottom of hole. If oil level does not reach this level, fill until level is reached. Replace plugs. Recoil mechanism uses special recoil oil. Care must be taken not to use any other recoil oil than that prescribed. Special recoil oil will be used for all temperatures.

PART FOUR — AUXILIARY EQUIPMENT

Section XXII

GENERAL

66. SCOPE.

a. Part Four contains information for the guidance of the personnel responsible for the operation of this equipment. It contains only the information necessary to using personnel to properly identify, connect, and protect such auxiliary equipment while being used or transported with the main equipment. Detailed instructions pertaining to auxiliary equipment are contained in Technical Manuals.

Section XXIII

AMMUNITION

67. GENERAL.

a. Ammunition for the 90-mm Gun M3 is issued in the form of complete rounds of fixed ammunition. The term "fixed" signifies that the propelling charge is not adjustable and that the round is loaded into the gun as a unit. Fixed ammunition is characterized by the rigid crimping of the cartridge case to the projectile. A complete round consists of all the ammunition components required to fire the weapon once. As shipped, high-explosive shell for this gun are fitted with a point-detonating fuze to explode the shell on impact. Explosive-filled armor-piercing projectiles have a base-detonating fuze. All armor-piercing projectiles are fitted with a tracer for observation purposes.

68. FIRING TABLES.

a. Firing data for the Gun M3 on tank and motor carriage mounts was not available at the time of publication. An index of Firing Tables is maintained in FM 21-6.

69. CLASSIFICATION.

a. The ammunition available for use in this gun consists of the following types, classified according to the kind of projectile: high-explosive, armor-piercing-capped, armor-piercing, practice, blank, and drill (dummy).

b. The high-explosive projectile is a thin-walled shell containing a relatively large charge of high-explosive, intended for fragmentation

and blast effect. For use in the 90-mm Gun M3, it is fitted with a selective action fuze (M48 series), providing superquick action for surface burst or short delay action upon ricochet, or for mining effect. When assembled to the 90-mm high-explosive shell, the fuze is classified boresafe (detonator-safe) since the explosive train of the fuze and booster is so interrupted that, prior to firing and while the shell is still in the bore of the gun, premature functioning of the bursting charge is prevented should any of the more sensitive elements, primer and/or detonator, malfunction.

c. The armor-piercing-capped projectile is a comparatively thick-walled shell with a small charge of high-explosive, intended primarily for perforation of armor and explosive effect behind the plate. It is fitted with a Delay-action Base-detonating Fuze (M68) which is not considered boresafe. A tracer element incorporated in the base of the fuze operates independently of the fuze mechanism to provide a luminous trace for observation purposes during the first stages of the projectile's flight.

d. The armor-piercing projectile is an uncapped solid shot of the monobloc type. It has a tracer incorporated directly in its base which functions like that in the fuze of the capped armor-piercing projectile.

e. Practice ammunition for the 90-mm gun is similar to the high-explosive service round, except that the projectile has an inert filler and is fitted with a dummy or inert service fuze for use in target practice.

f. Blank ammunition contains no projectile, and is provided for use in the 90-mm gun primarily for simulated fire.

g. The drill cartridge is a completely inert assembly of malleable iron or bronze fitted with a dummy fuze. It is provided for practice in servicing the piece.

70. IDENTIFICATION.

a. **General.** Ammunition and ammunition components are completely identified by the painting and marking (including an ammunition lot number) which appear on all original packing containers and, when practicable, on the items themselves. For marking on the items themselves, see the paragraphs immediately below; for marking on containers, see paragraph 74 b.

b. **Mark or Model.** To identify a particular design, a model designation is assigned at the time the design is classified as an adopted type. This model designation becomes an essential part of the standard nomenclature of the item and is included in the marking of the item. The present system of model designation is to use the letter "M" followed by an arabic numeral. Modifications are indi-

cated by adding the letter "A" and its appropriate arabic numeral. Thus, "M48A1" signifies the first modification of an item for which the original model designation was "M48."

c. **Ammunition Lot Number.** At the time of manufacture, every item of ammunition is assigned a lot number in accordance with pertinent specifications. When practicable, this lot number is stamped on the item itself. In addition, an ammunition lot number is assigned to the complete round. This ammunition lot number is stamped or marked on each round and on all packing containers. It is required for all purposes of record, including reports on condition, functioning, and accidents in which the ammunition is involved. To provide for the most uniform functioning, all of the rounds of any one ammunition lot are made up of single lots of components. To obtain the greatest accuracy in firing, successive rounds should be from the same ammunition lot.

d. **Weight-zone Marking.** Small variations in weights occur during the manufacture of different lots of high-explosive shell. When required, such shell are grouped in weight zones so that appropriate ballistic corrections provided in Firing Tables may be applied for the variations. In the 90-mm caliber, the weight zone of the projectile is indicated thereon by squares in the same color as the marking, with a prick punch mark in each. One, two, three, or more, such squares are marked on the shell, depending on the weight of the loaded projectile. Two squares indicate "standard" or "normal" weight. For shell so marked, no weight corrections are necessary. The canister and armor-piercing projectiles do not have weight-zone markings.

e. **Marking.** The above, and other essential information, is marked on the 90-mm rounds as follows:

(1) ON THE PROJECTILE (STENCILED).

Caliber and type of cannon in which fired.

Kind of explosive filler, "TNT," "EXP. D," etc., when explosive filler is present.

Model of projectile.

"WITH TRACER," when tracer is present.

Weight-zone marking, when required.

Lot number of filled projectile. Ordinarily, the projectile lot number is not required after the complete round is assembled. Hence, it is stenciled below the rotating band, in which position it is hidden from view by the neck of the cartridge case.

(2) ON THE CARTRIDGE CASE:

Ammunition lot number and loader's initials (stenciled). The ammunition lot number will have an "X" suffix when the round is assembled with a steel cartridge case.

Model of projectile (stenciled).

Caliber and model of cartridge case (stamped in the metal). The model number will have a "B1" suffix when the case is made of steel.

Cartridge case lot number, initials or symbol of cartridge case manufacturer, and year of manufacture (stamped in the metal).

(3) ON THE POINT FUZE (STAMPED IN THE METAL).

Type and model of fuze.

Loader's lot number, including loader's initials.

Year of manufacture.

Action; that is "SQ," "DELAY." Since the Fuze M48A2 may have 0.05- or 0.15-second delay, depending on the lot, the length of delay in seconds (".05-SEC," or ".15-SEC," as applicable) is stamped on the fuze following the model number.

f. **Painting.** Artillery projectiles are painted primarily to prevent rust. Secondary purposes are to provide, by the color, a ready means of identification as to type, and for camouflage. The color scheme is:

High-explosive, and armor-piercing with explosive filler	Olive drab, marking in yellow.
Armor-piercing without explosive filler	Black, marking in white.
Practice	Blue, marking in white.
Drill (dummy)	Unpainted when of bronze; otherwise black, marking in white.

71. CARE, HANDLING, AND PRESERVATION.

a. **General.** Ammunition is packed to withstand conditions ordinarily encountered in the field. Care must be observed to keep packing containers from becoming broken or damaged. All broken containers must be repaired immediately, and careful attention given to the transfer of all markings to the new parts of the container. When it is necessary to leave ammunition in the open, raise it on dunnage at least 6 inches from the ground, and cover it with a double thickness of tarpaulin. Suitable trenches should be dug to prevent water from running under the pile.

b. Since explosives are adversely affected by moisture and high temperature, due consideration should be given to the following:

(1) Do not break the moisture-resistant seal until ammunition is to be used. Ammunition removed from the airtight container, particularly in damp climates, is apt to corrode, thereby causing the ammunition to become unserviceable.

(2) Protect the ammunition, particularly fuzes, from sources of high temperature, including the direct rays of the sun. More uniform firing is obtained if the rounds are at the same temperature.

c. Ammunition should be protected from mud, sand, dirt, and water. If the rounds become wet or dirty, they should be wiped off at once. Verdigris or corrosion should be wiped off. Ammunition should not be polished, however, to make it look better or brighter.

d. Explosive ammunition must be handled with appropriate care at all times. The explosive elements in primers and fuzes are particularly sensitive to undue shock and high temperature.

e. Blank ammunition with loose or broken closing cap will not be used or fired, but will be reported to the Ordnance officer for disposition.

f. Rounds prepared for firing, but not fired, will be returned to their original condition and packings, and appropriately marked. Such ammunition will be used first in subsequent firings in order that stocks of opened packings may be kept at a minimum.

g. Do not handle duds. Because their fuzes are armed, and hence, extremely dangerous, duds will not be moved or turned, but will be destroyed in place in accordance with TM 9-1900.

72. AUTHORIZED ROUNDS.

a. The ammunition authorized for use in the 90-mm Gun M3 is listed in table I together with essential data, and is illustrated in figures 54 to 58. Standard nomenclature is used in the listing of authorized rounds. Its use is mandatory for all purposes of record, except where the use of the Ammunition Identification Code (A.I.C.) symbol is prescribed to facilitate requisitioning and reporting in the field. Each complete round of fixed ammunition in a specific packing is assigned an A.I.C. symbol. These symbols are published in ORD 11 SNL's.

73. PREPARATION FOR FIRING.

a. All rounds are ready for use upon removal of packing material except high-explosive rounds, the fuzes of which must be adjusted for the desired action as described below.

b. **P.D. Fuzes M48 and M48A2.** For setting purposes, all fuzes of the M48 series have a slotted "setting sleeve" and two registration lines. The line parallel to the axis is marked "SQ" (superquick); the other at right angles thereto is marked "DELAY." As shipped, the fuze is "SQ." To obtain delay action it is only necessary to turn the "setting sleeve" so that the slot is alined with "DELAY." A black powder pellet incorporated in the delay action train provides for the

TABLE I

AUTHORIZED AMMUNITION FOR 90-MM GUN M3 MOUNTED ON COMBAT VEHICLES

STANDARD NOMENCLATURE OF COMPLETE ROUND	COMPLETE ROUND		PROJECTILE			ACTION OF FUZE	PROPELLING CHARGE	
				CHARGE				
	Weight (lb)	Length (in.)	Weight as fired (lb)	Kind	Weight (lb)		Type	Weight (lb)
Service Ammunition								
SHELL, fixed, H.E., M71, NH, w/FUZE, P.D., M48A2, SQ & 0.05-sec. delay, 90-mm guns	41.93	37.44	23.29	TNT	2.04	SQ, & Delay*	NH	7.31
SHELL, fixed, H.E., M71, w/FUZE, P.D., M48A2, SQ & 0.05-sec. delay, 90-mm guns	41.93	37.44	23.29	TNT	2.04	SQ, & Delay*	FNH	7.31
SHELL, fixed, H.E., M71, NH, w/FUZE, P.D., M48, 90-mm guns	41.93	37.44	23.29	TNT	2.04	SQ, & Delay*	NH	7.31
SHELL, fixed, H.E., M71, w/FUZE, P.D., M48, 90-mm guns	41.93	37.44	23.29	TNT	2.04	SQ, & Delay*	FNH	7.31
PROJECTILE, fixed, A.P.C., M82, NH, w/FUZE, B.D., M68, and TRACER, 90-mm guns	42.75	38.24	24.11	Exp. D	0.44	Delay	NH	7.31
PROJECTILE, fixed, A.P.C., M82, w/FUZE, B.D., M68, and TRACER, 90-mm guns	42.75	38.24	24.11	Exp. D	0.44	Delay	FNH	7.31
PROJECTILE, fixed, A.P.C., M82, NH, w/TRACER, 90-mm guns	42.04	38.24	23.40	None	.....	None	NH	7.31

PROJECTILE, fixed, A.P.C., M82, w/TRACER, 90-mm guns	42.04	38.24	23.40	None	.....	None	FNH	7.31
SHOT, fixed, A.P., M77, NH, w/TRACER, 90-mm guns	42.04	32.75	23.40	None	.....	None	NH	7.31
SHOT, fixed, A.P., M77, w/TRACER, 90-mm guns	42.04	32.75	23.40	None	.....	None	FNH	7.31
Practice Ammunition								
SHELL, fixed, practice, inert loaded, M71, NH, w/FUZE, dummy or inert, M—,† 90-mm guns	42.04	37.44	23.40	Inert	‡	Inert	NH	7.31
SHELL, fixed, practice, inert loaded, M71, w/FUZE, dummy, or inert, M—,† 90-mm guns	42.04	37.44	23.40	Inert	‡	Inert	FNH	7.31
Blank Ammunition								
AMMUNITION, blank, 90-mm guns	8.05§	7.25	.....	.....	.....	.....	Blk. Pwdr.	1.5
Drill (dummy) Ammunition								
CARTRIDGE, drill, M12, w/FUZE, dummy, M44A2, 90-mm guns	39.15	37.44	.....	.....	.....	Inert	.....	.....

A.P.—armor-piercing
A.P.C.—armor-piercing-capped
B.D.—base-detonating
Blk. Pwdr.—black powder
FHN—flashless nonhygroscopic
H.E.—high-explosive
NH—nonhygroscopic (flashing)
P.D.—point-detonating
SQ—superquick

*—0.05-second delay
†—May be either an inert service fuze of the M48 series; FUZE, dummy, M73; or FUZE, dummy, M44A2.
‡—Loaded to required weight.
§—Approximate

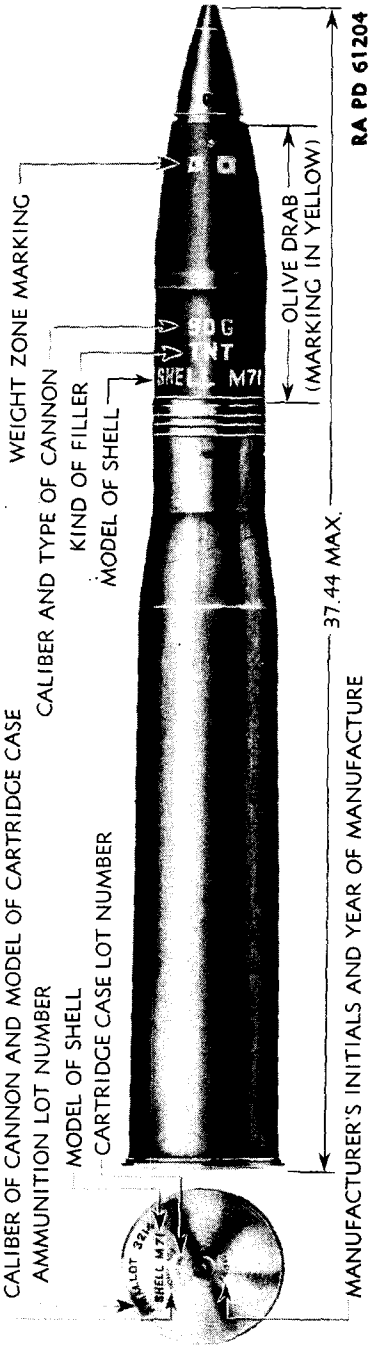

Figure 54 — H.E. Fixed Shell M71, With P.D. Fuze M48A2, SQ and 0.05-second Delay, for 90-mm Guns

delay action. The setting may be made or changed at will with the screwdriver end of Fuze Wrench M7A1, or similar instrument at any time before firing. This can be done in the dark by noting the position of the slot.

74. PACKING.

a. Data. Service and practice rounds have been packed in individual fiber containers, in turn packed in a wooden box holding two or four rounds. In addition, a new type of packing has been developed which consists of a metal packing container holding one round. Data given below is considered representative for estimating volume and weight requirements; complete data is published in ORD 11 SNL's P-5, P-7, and P-8.

Over-all Dimensions of Packing Container (ft)	Weight (lb)	Volume (cu ft)
4-rd. box: 3.64 x 1.08 x 1.08	236	4.24
2-rd. box: 3.65 x 1.08 x 0.61	129	2.40
Metal cntr.: 3.61 x 0.51 x 0.51		0.94

b. Marking for Shipment.

(1) Packings for shipment are marked as follows:

(a) Name and address of destination or port officer, preceded by word "To."*

(b) Name and address of ultimate consignee, preceded by word "For."*

(c) List and description of contents. "NH" will be stamped on packing boxes and sealing strips of containers containing NH propellent powder. Packings not so marked may be assumed to contain FNH-loaded rounds.

(d) Ammunition Identification Code (A.I.C.) symbol, as published in SNL's.

(e) Gross weight in pounds, displacement in cubic feet.

(f) The number of the package or shipping ticket.*

(g) The letters "U.S." in several conspicuous places (not mandatory).

(h) Order number or contract number.

(i) Ordnance insignium and escutcheon.

*May be omitted on individual package in carload shipments of packages of standard weights and dimensions containing standard quantities.

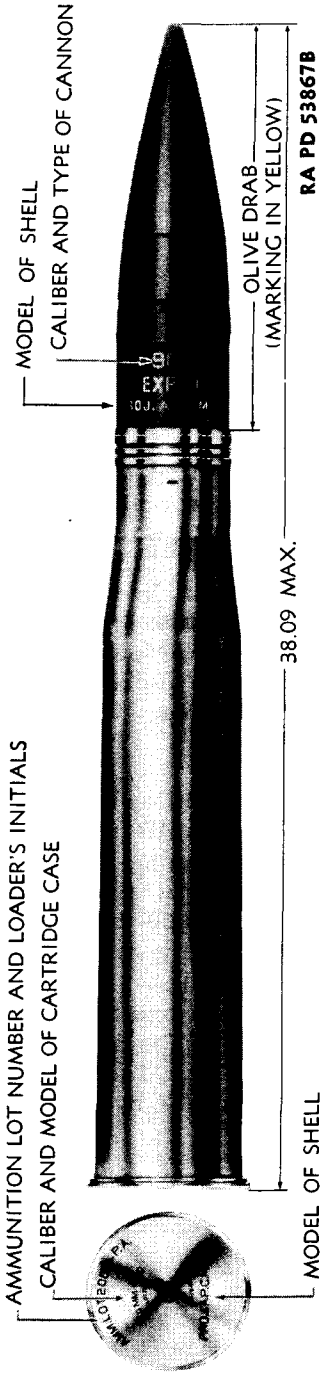

Figure 55 — A.P.C. Fixed Projectile M82, With B.D. Fuze M68 and Tracer, for 90-mm Guns

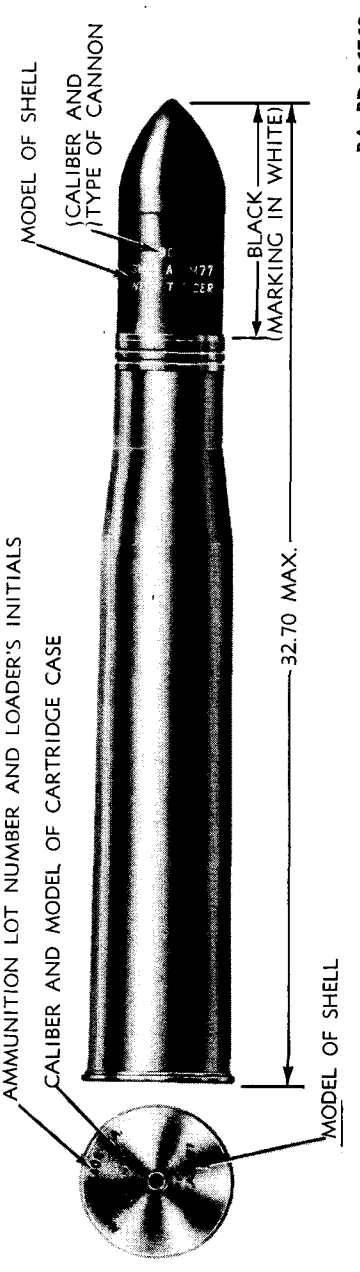

Figure 56 — A.P. Fixed Shot M77, With Tracer, for 90-mm Guns

(j) Name or designation of consignor preceded by the word "From."*

(k) Lot number.

(l) Month and year packed.

(m) Inspector's stamp.

(2) In addition, the adhesive sealing strips on fiber containers are in the same color as the projectile, in accordance with the basic color scheme, except that a yellow strip, with marking in black (the earlier color scheme), indicates a high-explosive projectile.

75. SUBCALIBER AMMUNITION.

a. 37-mm Subcaliber Ammunition. Practice fixed shell M92 with P.D. Fuze M74 is standard for use in the 37-mm subcaliber guns. Substitute standard is Practice Fixed Shell M63-Mod. 1, with Practice B.D. Fuze M58. These rounds are issued in the form of fuzed complete rounds of fixed ammunition. Both projectiles have a black powder charge which serves as a spotting charge, but the Shell M92 is fitted with a point-detonating fuze whereas the M63-Mod. 1 has a base-detonating fuze. For shipment, the rounds are packed in individual containers, in turn packed 40 per wooden box. Complete packing data will be found in ORD 11 SNL R-1.

b. Caliber .50 Subcaliber Ammunition. Cal. .50 Ball Cartridge M2 is provided for use in the (Flexible) Cal. .50 HB Browning Machine Gun M2 when this gun is used on a subcaliber mount. The muzzle velocity of the 709.5-grain bullet is 2,935 feet per second, in a 45-inch barrel; the maximum range in this barrel is 7,600 yards. Additional data is given in TM 9-1990. For shipment, the cartridge is packed 10 per carton. Cartons in turn are packed either 35 cartons (350 rounds) per metal-lined box; or 12 cartons per waxed container, 2 waxed containers (240 rounds) per wooden box. The 350-round box weighs 112 pounds and measures 1.54 by 0.79 by 1.23 feet. The 240-round box weighs 78.9 pounds and measures 1.27 by 1.16 by 0.76 feet.

*May be omitted on individual package in carload shipments of packages of standard weights and dimensions containing standard quantities.

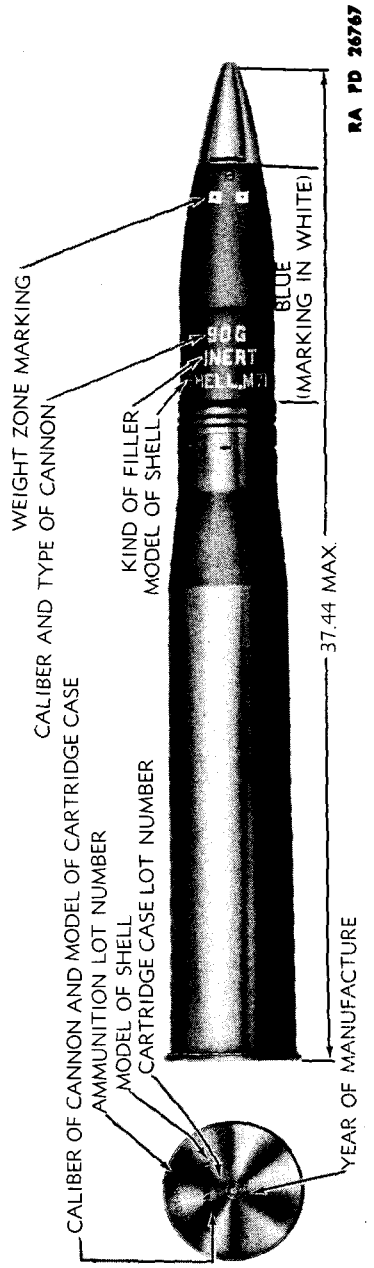

Figure 57 — Inert-loaded Fixed Practice Shell M71, With Dummy Fuze M73, for 90-mm Guns

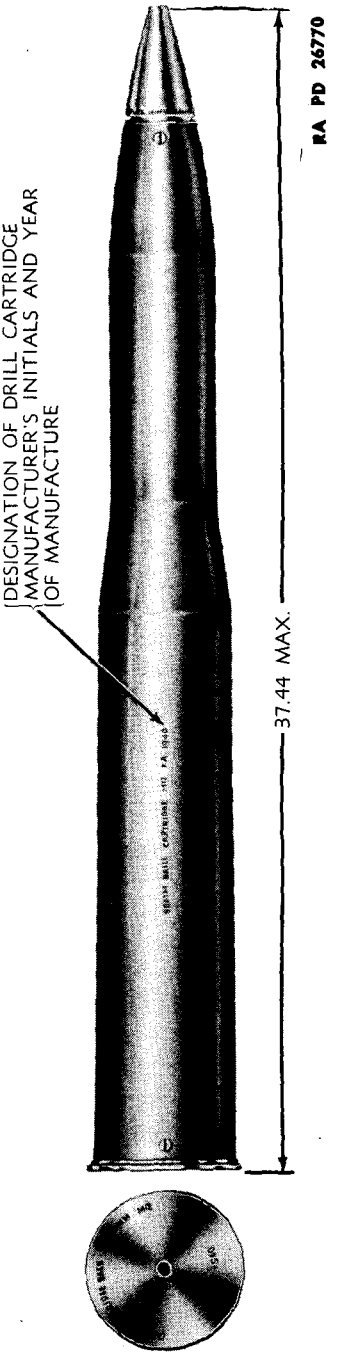

Figure 58 — Drill Cartridge M12, With Dummy Fuze M44A2, for 90-mm Guns

Section XXIV

SIGHTING AND FIRE CONTROL EQUIPMENT

76. ARRANGEMENT OF SIGHTING AND FIRE CONTROL EQUIPMENT.

a. Medium Tanks T25E1 and T26E1.

(1) The on-carriage sighting and fire control equipment for the 90-mm Gun M3 used in these tanks includes the Telescope Mount T90 with Telescope M71C and Instrument Light M33, or Telescope M70P with Instrument Light M32 or M39C; the Periscope M10F with periscope mount and Instrument Light M30 (Periscope M8A1 with Telescope M80D (T121) and Instrument Light M30 is furnished as a spare) for those tanks which have no bulge in their turrets; the Periscope M10N with periscope mount and Instrument Light M30 (Periscope M4A1 with Telescope M77F is furnished as a spare) for those tanks which have a bulge in their turrets; and the Elevation Quadrant M9 with Instrument Light M30.

(2) The Periscope M6 is furnished for observation from within the tank by the driver and assistant driver.

(3) The off-carriage fire control equipment for these tanks includes the Binocular M13, the Gunner's Quadrant M1, the Azimuth Indicator M18 or M20, and the Fuze Setter M14.

b. 90-mm Gun Motor Carriage T71 (M36).

(1) The on-carriage sighting and fire control equipment for the 90-mm Gun M3 and 90-mm Gun Mount T8 (M4) used on the 90-mm Gun Motor Carriage T71 (M36) includes the Telescope Mount T92 with Telescope M76F and Instrument Light M33, or Telescope M70P with Instrument Light M32 or M39C; Telescope Mount T104E1 with Panoramic Telescope M12 and Instrument Light M31; and the Elevation Quadrant M9 with Instrument Light M30.

(2) The Periscope M6 is furnished for observation by the driver and assistant driver of the vehicle.

(3) The off-carriage fire control equipment for the carriage is the same as for the medium tanks described above.

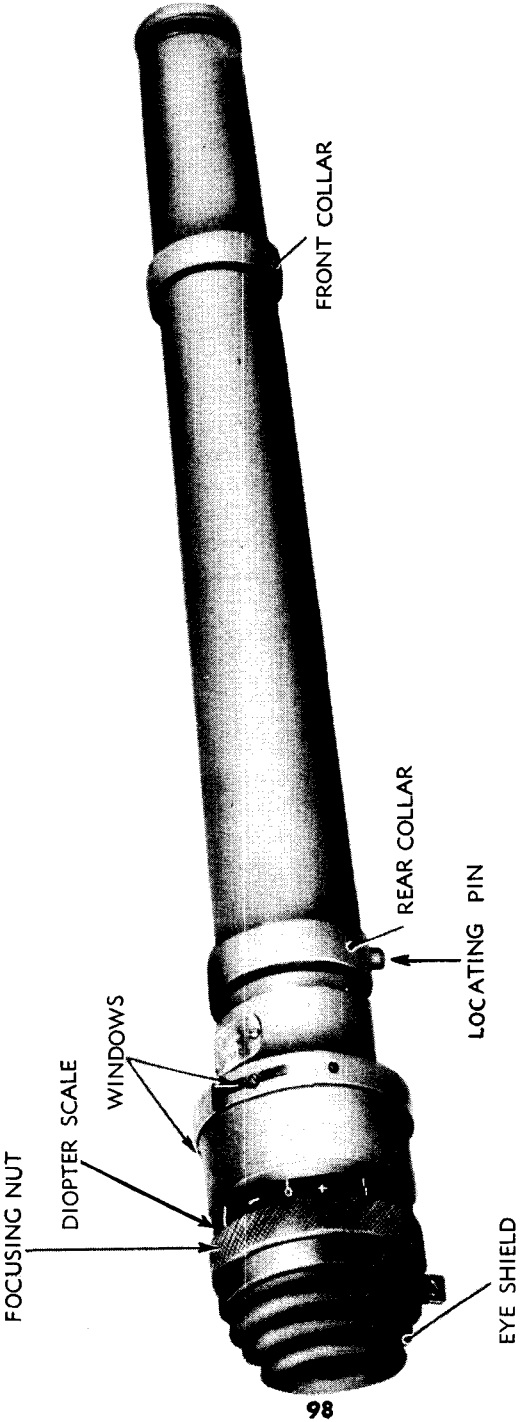

RA PD 15455

Figure 59 — Telescope M71C

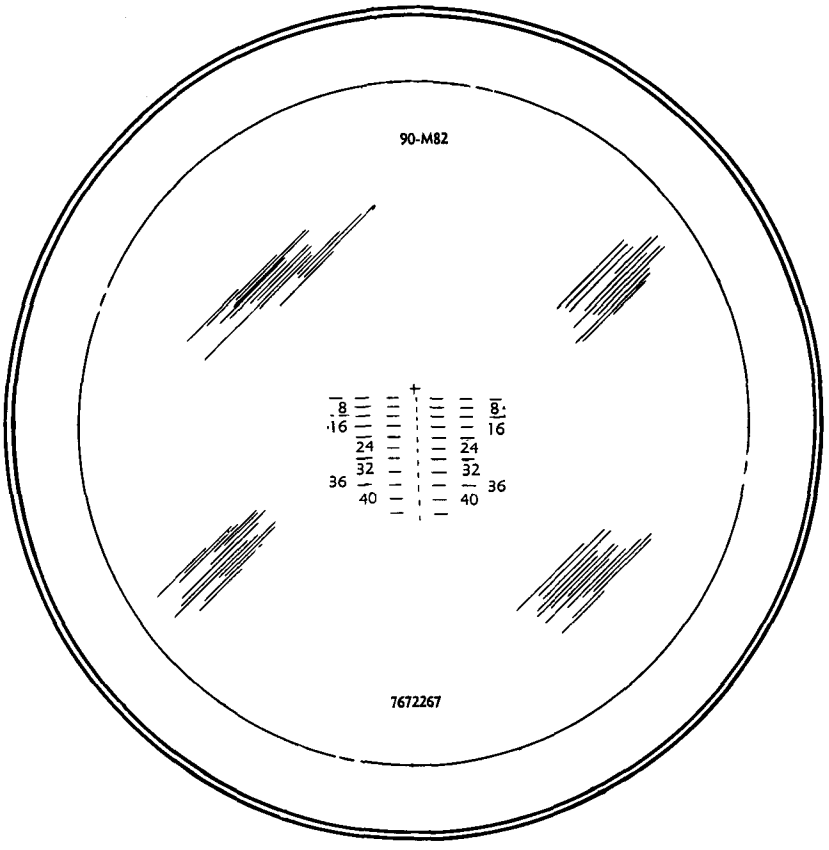

RA PD 31454

Figure 60 — Reticle Pattern for Telescope M71C

77. TELESCOPE M71C.

a. Description.

(1) The Telescope M71C (fig. 59), which is a straight tube telescope, is mounted in the Telescope Mount T90, on the right-hand side of the gun cradle. The telescope is a 5-power erect image instrument having a field of view of 13 degrees. Windows above the reticle provide for illumination of the reticle pattern.

(2) The reticle pattern (fig. 60) is based upon the data from Firing Table 90-C-2, Part 2A, and is correct for the 90-mm Gun M3 with Armor-piercing-capped Projectile M82; muzzle velocity of 2,670 feet per second; minus 0.2-mil vertical jump; plus 0.7-mil side jump at zero range; and plus 2.0 mils side jump and drift at 4,000 yards range. The cross in the pattern represents zero range and zero deflection.

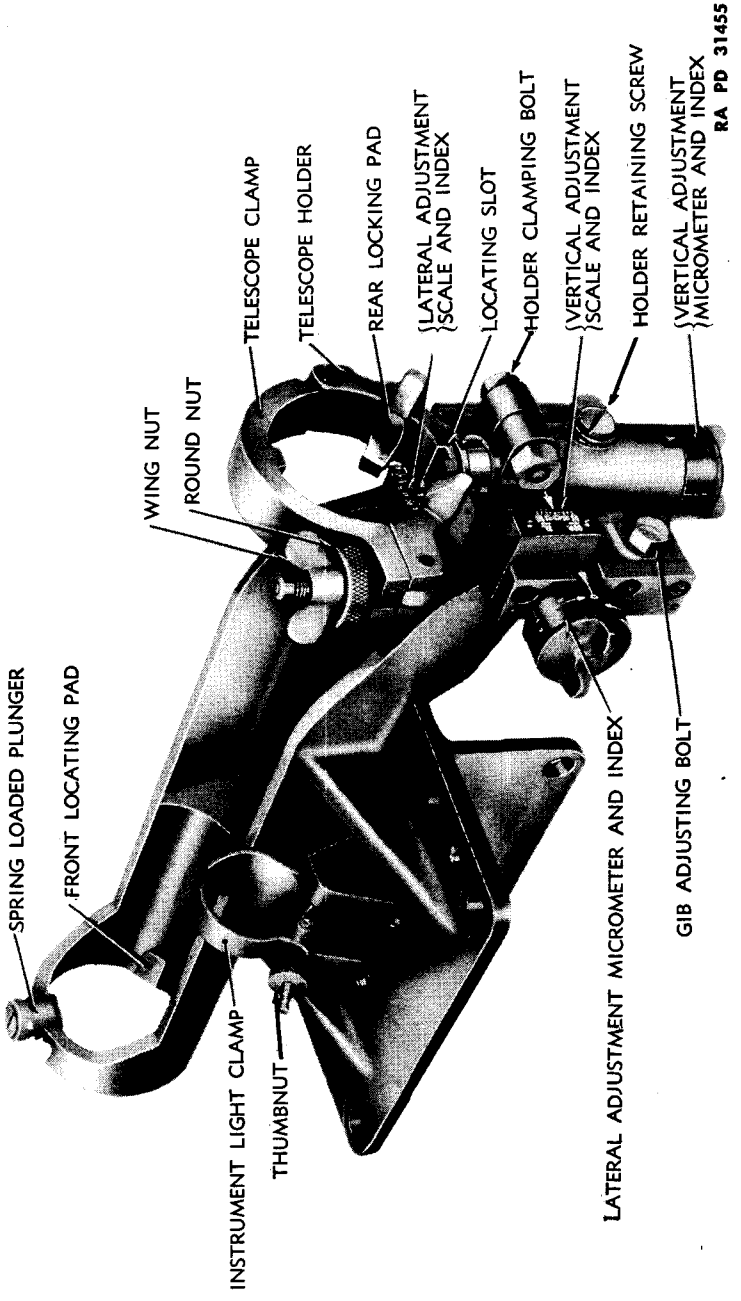

Figure 61 — Telescope Mount T90 — Left Rear View

The cross is used for bore sighting. The broken line extending downward below the cross is at a slight angle to, and offset from the vertical center of the reticle to compensate for drift and lateral jump. Each part of the broken line represents an interval of 200 yards range, and serves as a guide when laying the gun for a range falling within a 400-yard interval. The broken horizontal lines below the cross represent 400; 800; 1,200; 2,000; 2,400; 2,800; 3,200; 3,600; 4,000; and 4,400 yards range. The bottom of the broken line extending downward below the cross represents 4,600 yards range. The range marks are numbered 8, 16, 24, 32, 36, and 40. Each horizontal line and each horizontal space represents a deflection or lead of 5 mils. The inscription "90-M82" at the upper edge of the reticle indicates the ammunition. The number "7672267" at the lower edge of the reticle is the part number of the reticle.

b. Telescope Removal and Replacement.

(1) Remove the lamp bracket, with the hand, from the top of the telescope.

(2) Loosen the wing nut and round out on the left side of the telescope clamp (fig. 61) and slide the telescope backwards. When replacing the telescope, insert the front of the telescope through the front holder from the rear, and push the telescope forward until the locating pin on the under side of its rear collar (fig. 59) engages the locating slot in the rear holder. Moderate force is necessary to push the telescope into place, as the spring-loaded plunger in the front holder bears down on the telescope.

(3) Close the rear clamp and secure the telescope in place by tightening the round nut and wing nut. Attach the lamp bracket to the telescope.

c. Operation.

(1) To operate the Telescope M71C for direct laying of the 90-mm Gun M3 against moving targets, bring the image of the target to the point on the reticle representing the required range and deflection by rotating the elevating handwheel and traversing the turret. The gunner's eye should be approximately 1¼ inches from the telescope eyelens when observing.

(2) For night observing, turn the rheostat knob on the end of the instrument light until the reticle pattern is seen clearly.

d. Adjustments. The telescope and gun are bore sighted as described in paragraph 87 at the time the telescope mount is assembled to the gun mount, and no further adjustments other than verification of this adjustment should be necessary by the using arm.

e. Care and Preservation.

(1) The Telescope M71C is a precision optical instrument and care should be exercised in handling to prevent damaging or disturb-

ing the optical system. Be careful to avoid denting or otherwise damaging the collars and spherical bearing surfaces of the telescope when removing and replacing it in the mount.

(2) The spherical bearing surfaces and collars of the telescope should be kept coated with a light film of grease to prevent rust. Wipe all dust and grit from locating surfaces before placing the telescope in the mount.

(3) Keep the illumination windows over the reticle clean.

(4) Refer to paragraph 37 for general care and preservation pertaining to sighting equipment.

78. TELESCOPE MOUNT T90.

a. Description.

(1) The Telescope Mount T90 (fig. 61) supports the Telescope M71C in a front and rear holder. The front holder is fixed, but the rear holder is adjustable with lateral and vertical adjusting mechanisms for bore sighting the mount and telescope. The amount of the adjustment is registered on scales and micrometers. The lateral adjustment scale which is on the right side is graduated in reference units approximating mils, from 0 to 20 either side of 0, and marked 0, 10, 20. Arrows and the letters "L" and "R" (left and right) indicate the direction of the adjustment. The lateral adjustment micrometer, which is on the left side, is graduated for reference only in approximate mils, and marked 0, 1, 2, 3, 4, in both directions. Arrows and the letters "L" and "R" indicate the direction of the adjustment. The sum of the scale and micrometer readings is the amount of the adjustment in units. The vertical adjustment scale and micrometer are graduated in the same manner as the lateral adjustment scale and micrometer with the exception that the direction of the adjustment is indicated by the letters "EL" and "DEP" (elevation and depression). No means are provided for setting off deflection or elevation angles; this is accomplished with the graduated reticle in the telescope.

(2) The headrest which is mounted on the right-hand side of the gun cradle is adjustable to suit the position of the gunner's head. The clamp for the Instrument Light M33 is secured to the left side of the telescope mount. For description of the instrument light, refer to paragraph 79.

b. Operation.

(1) Adjust the headrest for the gunner's eye. To move the headrest vertically, loosen the two bolts between the mounting and supporting bracket, and move either up or down to suit the gunner. Tighten the bolts. To move the rest in a horizontal position, loosen the bolt holding the rest, and slide the rest either in or out, in order

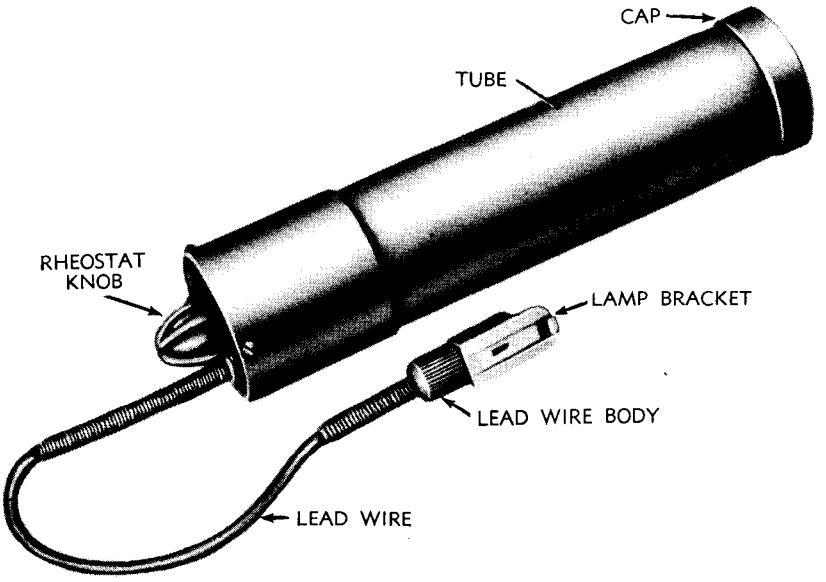

RA PD 28951

Figure 62 — Instrument Light M33

to secure the fullest field of view. Tighten the bolt and check to see that neither adjustment has slipped.

(2) For operation of the lateral and vertical adjusting mechanisms, refer to paragraph 87 on procedure for bore sighting.

c. Adjustments.

(1) Aside from the adjustments associated with the operation described above, and the adjustment of the micrometers to read zero when their respective scales read zero, described below, no adjustments are to be made by the using personnel.

(2) If a micrometer does not register zero when its scale reads zero, loosen the clamping nut in the end of the micrometer knob and, while holding the knob to prevent movement of the scale, slip the micrometer until it registers exactly zero. Tighten the clamping nut.

d. Care and Preservation.

(1) Exercise care to prevent denting or otherwise damaging the locating surfaces of the mount. See that locating surfaces are kept clean and covered with a light film of grease.

(2) Before assembling a telescope to its mount, wipe all dust and grit from the locating surfaces of both the mount and telescope.

(3) Keep all oil, grease, and dirt from the forehead pad of the headrest.

(4) Keep the telescope mount covered when not in use.

(5) Refer to paragraph 37 for general care and preservation instructions pertaining to the equipment.

79. INSTRUMENT LIGHT M33.

a. Description. The Instrument Light M33 consists principally of a body tube and rheostat connected to a lamp bracket by a lead wire and lead wire body. Two 1½-volt dry-cell batteries are contained in the body tube. A 3-volt electric lamp is contained in the lamp bracket. A rheostat knob on the end of the body tube turns the light on or off and regulates the intensity of the illumination. The body tube is held in a clamp attached to the left side of the telescope mount. The lamp bracket engages a slot in the top of the telescope over the reticle.

b. To Remove Instrument Light M33 From Telescope and Mount.

(1) With the fingers, disengage the lamp bracket from the top of the telescope.

(2) Loosen the thumb nut on the clamp which secures the body tube, until the tube can be slid out of the clamp.

(3) When replacing the lamp bracket on the telescope, be sure the bracket is fully engaged in the slot and is positioned by the spring and ball detent.

c. To Replace Batteries. Turn the cap on the end of the body tube to disengage the two bayonet slots in the tube, and pull off the cap. Remove the two batteries. When replacing the batteries in the body tube be sure they go back in the same position as when removed. See that the pins in the cap engage the bayonet slots in the body to assure a tight contact with battery terminals.

d. To Replace Electric Lamp. Unscrew the lamp bracket from the lead wire body. Unscrew the 3-volt electric lamp from the socket.

e. Operation. Turn the rheostat knob on the rear end of the body tube until the reticle pattern as observed through the telescope is clearly visible.

f. Adjustments. No adjustments, other than those described above, are permitted by the using arm. If the instrument light fails to provide the required amount of illumination after checking the batteries, lamp, and windows, turn the instrument in for repairs by qualified Ordnance maintenance personnel.

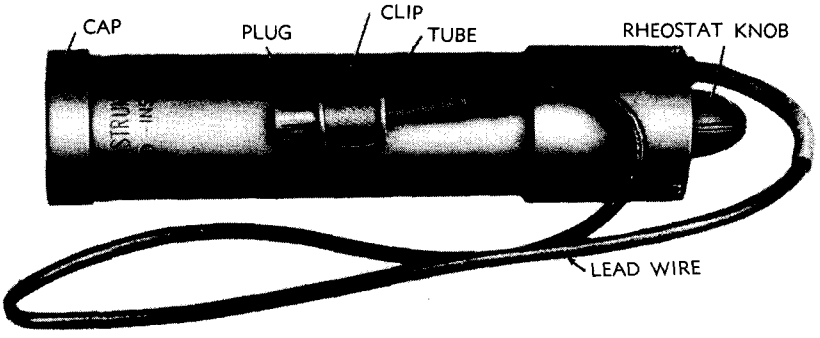

RA PD 31680

Figure 63 — Instrument Light M30

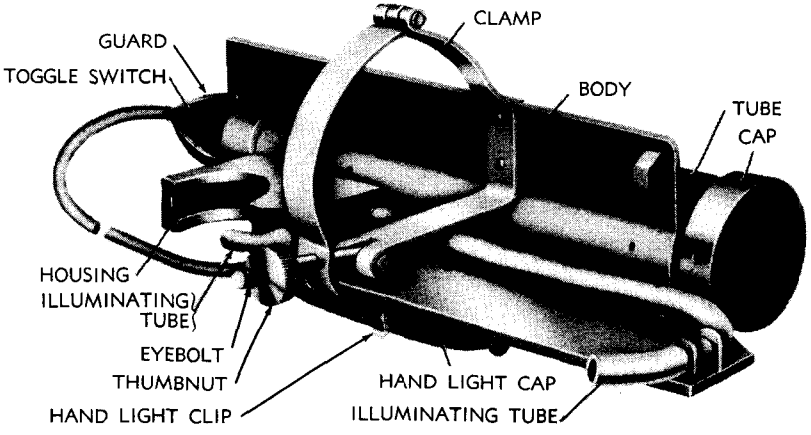

RA PD 31681

Figure 64 — Instrument Light M31

g. Care and Preservation.

(1) Do not turn the rheostat knob so that the reticle is excessively illuminated. Just enough illumination to bring out clearly the reticle pattern is all that is necessary. Excessive illumination serves no purpose and will shorten the life of the batteries.

(2) Remove the cells from the body tube whenever the instrument light is not to be used for long periods, otherwise the chemical reaction set up in them will damage the tube.

(3) Keep the instrument light clamp tight.

(4) Keep the contact surface of the lamp bracket covered with

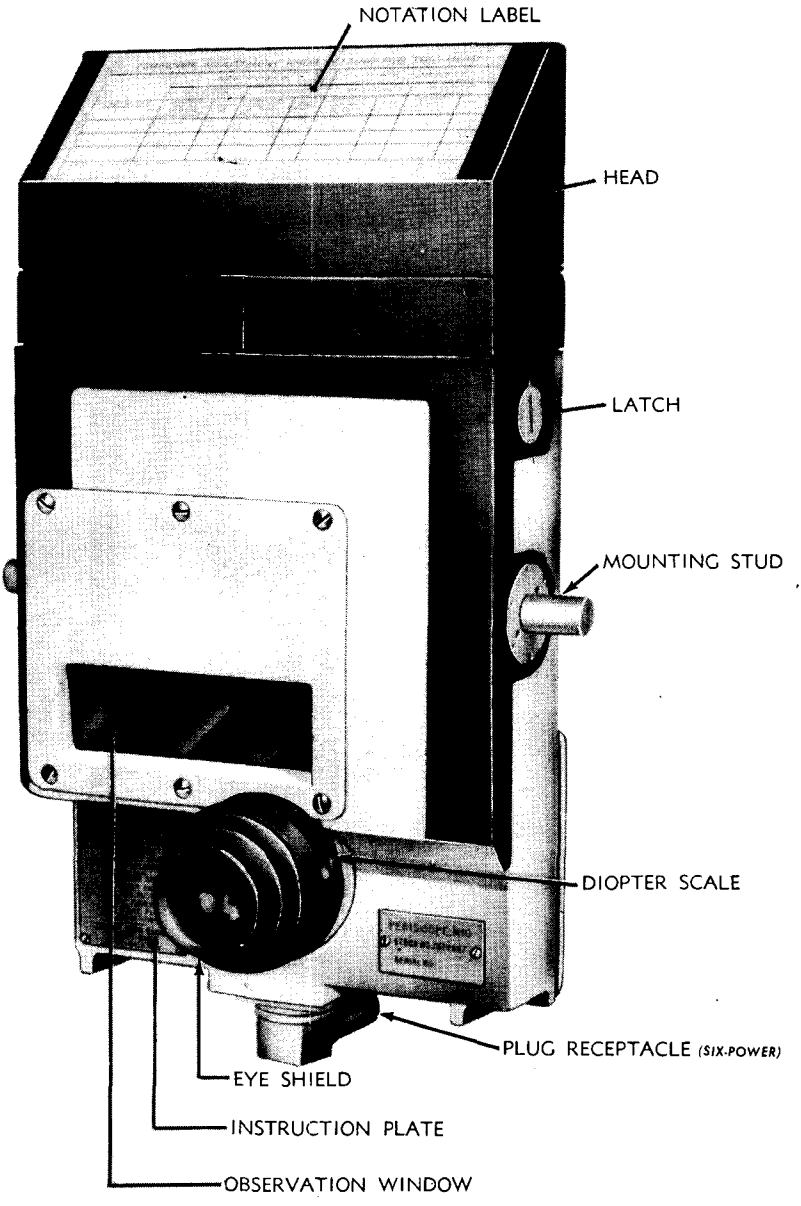

RA PD 31451

Figure 65 — Periscope M10F — Right Rear View

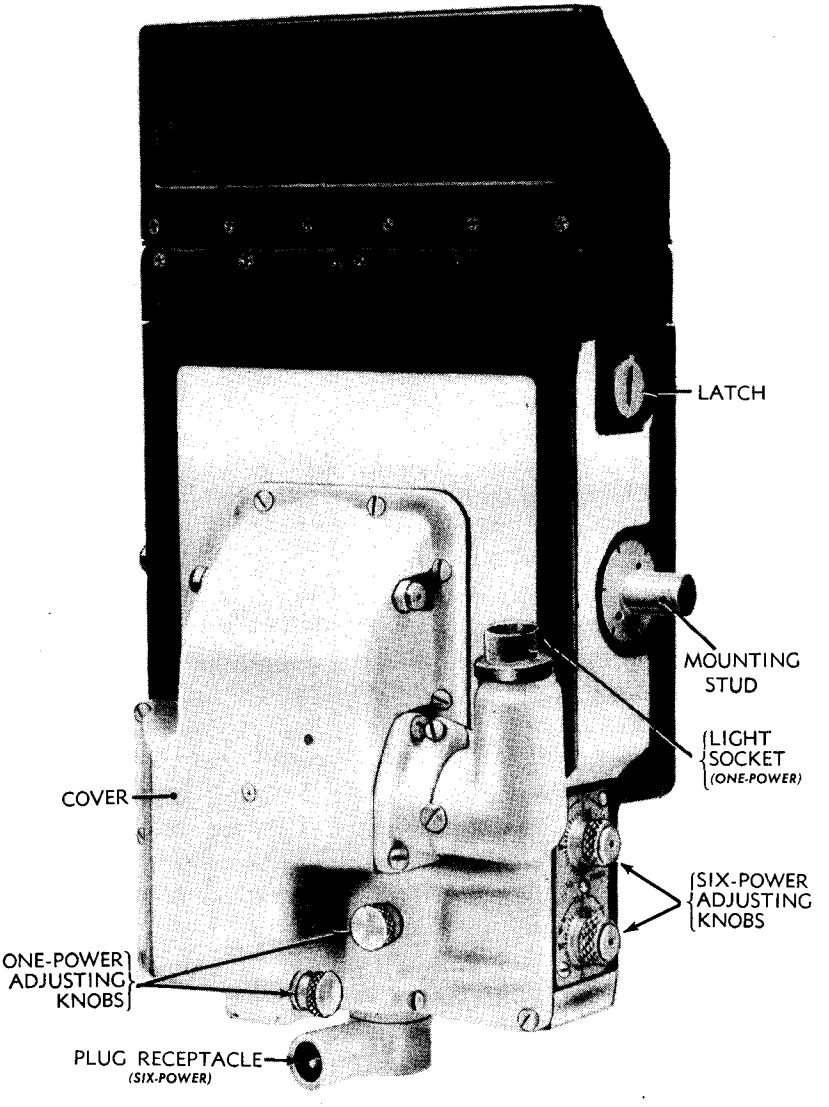

RA PD 31452

Figure 66 — Periscope M10F — Left Front View

a light coating of grease. Occasionally apply a drop of lubricating oil to the spring and ball in the lamp bracket.

(5) Refer to paragraph 37 for general care and preservation instructions pertaining to sighting equipment.

80. INSTRUMENT LIGHT M30.

a. Description. The Instrument Light M30 (fig. 63) is identical to the Instrument Light M33 described above, with the exception that the Instrument Light M30 is provided with a plug assembly instead of the lamp bracket assembly and lead wire body.

81. INSTRUMENT LIGHT M31.

a. The Instrument Light M31 (fig. 64), which is a self-contained instrument light, consists principally of a body upon which is mounted a tube, housing, and a clamp. The tube contains two dry-cell batteries which are operated by a toggle switch on the end of the tube. The batteries supply current to an electric lamp in the housing, and to a hand light. Light from the lamp in the housing illuminates the reticle, the scales on the panoramic telescope, and the level vials on the mount. Light from the hand light is used to illuminate the scale, ndexes, and range drum on the telescope mount. The clamp secures he instrument light to the Panoramic Telescope M12.

b. To Remove Instrument Light M31 From Panoramic Telescope. Loosen the thumb nut until the clamp can be lifted from the eyebolt. Do not remove the thumb nut. Lift the clamp and remove the instrument light from the telescope.

c. To Replace Batteries. Replace batteries in the same manner as for the Instrument Light M33 which is described in paragraph 79.

d. To Replace Electric Lamps.

(1) To replace the electric lamp in the housing, unscrew the lamp socket in the side of the housing and unscrew the lamp.

(2) To replace the electric lamp in the hand lamp, unscrew the hand lamp cover, and unscrew the lamp.

e. Operation. To operate the Instrument Light M31, turn the toggle switch which is on the end of the tube to the on position.

82. PERISCOPE M10F.

a. General.

(1) The Periscope M10F (figs. 65 and 66) is used for direct laying against moving targets. The periscope contains two built-in optical systems: a one-power system for use when the general terrain is to be observed and the target is close to the gun, and a six-power system for use when laying on distant targets. The one-power system

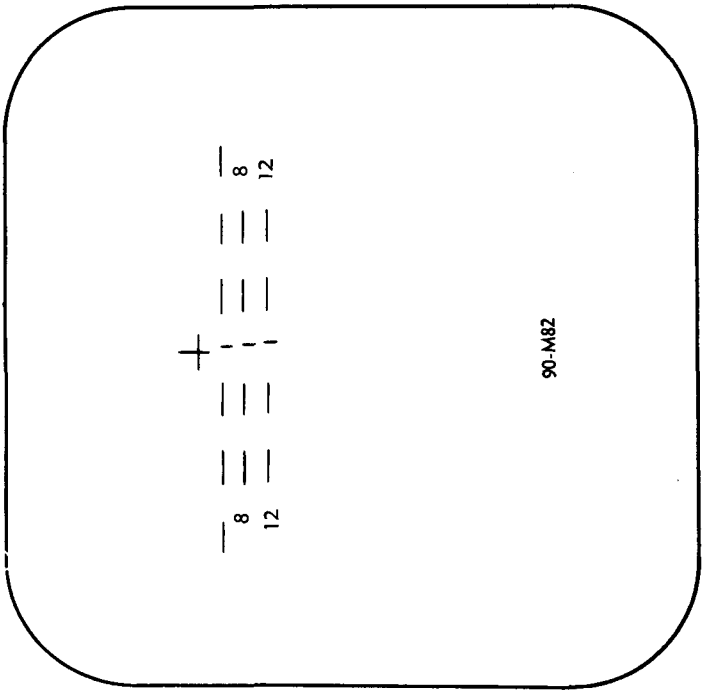

FOR ONE-POWER SYSTEM

FOR SIX-POWER SYSTEM

RA PD 31453

Figure 67 — Reticle Patterns for Periscope M10F

may also be used in an emergency to supplant the six-power system.

(2) Adjusting mechanisms for bore sighting the periscope, and electric lamps for illuminating the reticles, are contained in the lower portion of the periscope.

(3) The housing for these parts consists of the periscope head assembly, the periscope body assembly, and the cover assembly.

b. Description.

(1) PERISCOPE HEAD ASSEMBLY. The head assembly is secured to the body of the periscope by a head clamp which is engaged by latches operated by eccentric assemblies in the periscope body (figs. 65 and 66). The arrangement of these parts is such that the head can be removed readily. The head is constructed of plastic material to permit it to shatter into small fragments when struck by a projectile. Several spare heads are furnished with each periscope. A notation label, which is attached to the top of the periscope head, is used for recording bore-sighting adjustments and the serial numbers of the periscope.

(2) PERISCOPE BODY ASSEMBLY. The deflection and elevation adjusting mechanisms which are in the lower portion of the periscope body are operated by four adjusting knobs: two for the one-power optical system, and two for the six-power optical system. Instructions for their use are engraved on the plate shown in figure 65. An observation window for use with the one-power optical system, and an eyepiece for use with the six-power system are located in the rear of the periscope body. Light wells in the periscope body provide for illumination of the reticles of both optical systems. A 28-volt lamp supplied with current from the tank source illuminates the reticle of the one-power system whenever the system is in use, and a 3-volt lamp supplied with current from the Instrument Light M30 illuminates the reticle of the six-power system for night operation.

(3) RETICLE PATTERN FOR ONE-POWER OPTICAL SYSTEMS. The reticle pattern (fig. 67) for the one-power optical system appears in a horizontal field of view of 42 degrees 10 minutes and in a vertical field of view of 8 degrees 10 minutes. The reticle is graduated for Armor-piercing-capped Projectile M82; muzzle velocity of 2,670 feet per second; minus 0.2-mil vertical jump; plus 0.7-mil side jump at zero range; and plus 2.0 mils side jump and drift at 4,000 yards range. The graduations are based on data contained in Firing Table 90-C-2, Part 2A. The cross represents zero range and zero deflection and is used when bore sighting. The broken line extending downward below the cross is at a slight angle to, and offset from, the vertical center of the reticle to compensate for side jump and drift. Each part of the broken line represents an interval of 200 yards range, and serves as a guide when laying the gun for a range falling within a 400-yard interval. The broken horizontal lines below the cross represent 400; 800;

and 1,200 yards range. The bottom of the broken line extending downward below the cross represents 1,400 yards range. The range marks are numbered 8 and 12. Each horizontal line and each horizontal space represents a deflection or lead of 5 mils. The inscription "90-M82" at the lower edge of the reticle indicates the ammunition.

(4) RETICLE PATTERN FOR SIX-POWER OPTICAL SYSTEM. The reticle pattern (fig. 67) for the six-power optical system appears in a horizontal and vertical field of view of 10 degrees 20 minutes. The reticle pattern is identical to the reticle pattern for Telescope M71C (fig. 2) with the exception that the pattern for the periscope reticle is slightly larger and has the part number "7672807" etched on the reticle at the lower edge.

(5) PERISCOPE HOLDER. The Periscope M10F fits in a holder which is mounted in the turret. The periscope is provided with mounting studs for positioning it in the holder. The studs fit into slots in the sides of the holder and are held in the slots by two locking levers. The levers work together. They are supported in either one of two positions by spring-loaded plungers. In one position, the periscope is retracted; in the other position, the periscope is in the viewing position. Only the head of the periscope projects through the tank armor when the periscope is ready for operation. A headrest is mounted on the holder for the convenience of the gunner. Linkage connects the periscope holder to the gun mount so that the periscope moves as the gun is elevated or depressed, thus maintaining the relation of the periscope to the gun as it was positioned when bore sighted.

c. Disassembly and Assembly of Periscope M10F.

(1) TO REMOVE THE PERISCOPE FROM THE HOLDER. When removing the periscope from the holder, support the bottom of the periscope with one hand to prevent a sudden drop when the locking levers are released; the levers move together. Push in the rear spring-loaded plunger on the right side of the periscope holder and swing the locking lever down against the front plunger. Slide the periscope down in its holder until its mounting studs rest against the levers. The periscope is now in the retracted position. Force in the front plunger and swing the locking levers down to clear the slot in the body. Pull the periscope straight down until it is clear of the holder. Do not attempt to push or pull the periscope away from the holder until it is entirely clear of the bottom of the holder; otherwise, the periscope head may be damaged.

(2) TO REPLACE THE PERISCOPE IN THE HOLDER. To replace the periscope in the periscope holder, see that the locking levers do not block the slots into which the mounting studs must be inserted, and proceed in the reverse order for removal.

(3) TO REMOVE THE HEAD ASSEMBLY FROM THE PERISCOPE. Remove the periscope from the holder as described above. With a

screwdriver, turn the two eccentrics located on the sides and upper part of the periscope body (figs. 65 and 66) until the head clamp is completely disengaged from the latches. Lift the head from the periscope body.

(4) TO REPLACE THE HEAD ASSEMBLY ON THE PERISCOPE. Position the head assembly on the top of the periscope body with the window facing the front. Turn the eccentrics so that the latches securely engage the head clamp.

d. Operation.

(1) USE OF ONE-POWER OPTICAL SYSTEM. Use the one-power optical system for general observation of a wide field of view, and for laying the gun on targets close to the tank. This system may also be used in an emergency to supplant the six-power system. See that the tank power source lead is plugged into the light socket (fig. 66). Observing through the observation window, bring the image of the target to the point on the reticle representing the required range and deflection by rotating the elevating handwheel and traversing the turret.

(2) USE OF SIX-POWER OPTICAL SYSTEM. Use the six-power optical system for laying the gun on distant targets. Observing through the eyepiece, focus the eyepiece and bring the image of the target to the point on the reticle representing the required range and deflection by rotating the elevating handwheel and traversing the turret. At night or at other times when the reticle pattern is not clearly visible, turn the rheostat knob of the Instrument Light M30 (fig. 63) which controls the intensity of the illumination until the reticle pattern can be seen clearly.

e. Adjustments.

(1) In general, only the specified adjustments and replacements are to be performed by the using personnel. Tools and parts are furnished for performing these operations. Other replacements and adjustments are the responsibility of the Ordnance maintenance personnel, but may be performed by the using personnel, when circumstances permit, within the discretion of the pertinent Ordnance officer.

(2) The connecting link between the gun trunnion and the periscope holder is adjusted when installed and no adjustment in the field is necessary. Subsequent adjustment, if required, will be made by Ordnance personnel.

(3) The periscope is bore sighted after the periscope holder is installed in the tank. The installation of a new head on the periscope makes it necessary to bore-sight the periscope. The removal of any part of the optical systems and associated adjusting mechanisms from the periscope body is not to be performed by the using personnel.

(4) When bore sighting the periscope, check the adjustment for

all the spare heads. The bore-sighting adjustments for the various heads (adjusting knob readings) are to be recorded together with the periscope serial numbers in the spaces provided on the notation label of each periscope head.

(5) To replace the 28-volt lamp of the one-power optical system, first remove the tank power source lead (bayonet-type plug) from the socket on the left-hand side of the periscope, by pressing downward on the plug and turning slightly until free. Then, with the hand, unscrew the socket assembly. Remove the lamp (bayonet-type base) from its socket in the same manner as the plug was removed. Replace with a new lamp, and assemble in reverse order of disassembly.

(6) To replace the 3-volt lamp of the six-power optical system, pull out the plug of the Instrument Light M30 from the housing of the receptacle assembly. The receptacle assembly is screwed into the window assembly in the under side of the periscope. Unscrew the receptacle assembly. The lamp can now be unscrewed from the receptacle assembly. Replace with a new one and assemble in the reverse order of disassembly.

f. Care and Preservation.

(1) Keep the periscope in the retracted position with the periscope holder cover down, when not in use.

(2) Be careful to prevent bumping or denting the periscope body or its locating surfaces when replacing the periscope in its holder. Exercise particular care in handling the periscope head, as it is made of a breakable plastic material. Never pry against the head.

(3) Always depress the adjusting knobs of the periscope before rotating them, to avoid damage to the detents. Do not force the knobs beyond their limit of motion.

(4) Exposed glass surfaces of windows and lenses should be kept clean and dry. To remove dust from windows or lenses, brush the glass lightly with a clean, camel's-hair brush, then rap the brush against a hard body to knock out dust particles clinging to the hairs. Continue until all dust is removed. For wiping glass surfaces, use only clean lens tissue. Use of cleaning cloths is not permitted. To remove oil or grease from optical surfaces, apply lens-cleaning liquid soap with a tuft of clean lens tissue and wipe dry with clean, dry lens tissue. In the absence of lens-cleaning liquid soap, breathe heavily on the glass surface and wipe it dry with lens tissue.

(5) Do not wipe or touch lenses with the fingers.

(6) If excessive dust or moisture collects on the inside of the windows or mirrors of the periscope, the periscope should be disassembled and cleaned by Ordnance personnel.

(7) Clean the eyeshield frequently with a soft brush to remove

RA PD 84747

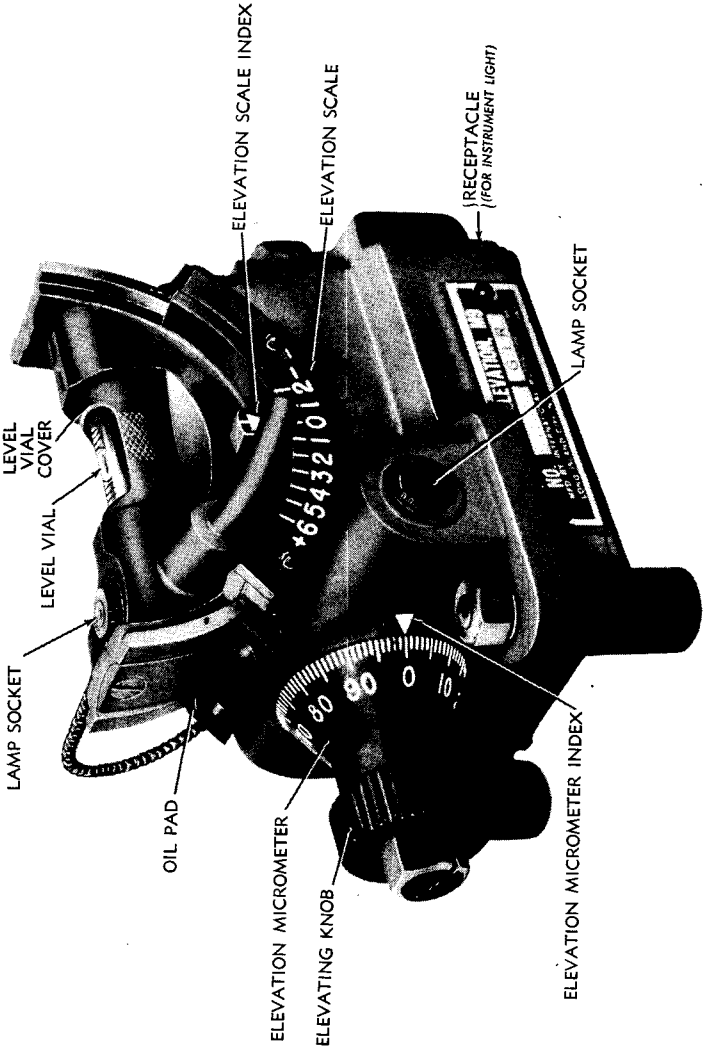

Figure 68 — Elevation Quadrant M9 — Right Side

dust, and wipe the eyeshield inside and outside with a damp cloth to keep it clean.

(8) Keep the external locating surfaces of the periscope covered with a light coating of lubricating oil. Moving parts of the periscope are lubricated at assembly, and should not be lubricated in the field except by trained Ordnance personnel.

(9) If moisture condenses on lenses or on the observation window, it may be removed by placing the instrument in a warm place. Heat from strongly concentrated sources should not be applied directly, as it may cause unequal expansion of parts, thereby resulting in breakage of optical parts or inaccuracies in observation.

(10) Batteries used in the instrument light should habitually be removed whenever the instrument light is not in use. Chemical reaction set up on exhausted batteries will damage the battery tube. To remove batteries, remove the cap on the battery tube. The cap is secured by bayonet pins, and is easily removed by pressing the cap inward and then turning slightly until free. When replacing the batteries in the tube, be sure they go back in the same position as when removed. See that the bayonet pins in the cap engage the slots in the tube to assure a tight contact with battery terminals.

83. ELEVATION QUADRANT M9.

a. Description.

(1) The Elevation Quadrant M9 (fig. 68) is used for setting off the required vertical angle to which the 90-mm gun must be elevated or depressed for indirect fire. The angle is registered on two identical scales, one on either side of the instrument, and a micrometer with two indexes, one on either side of the micrometer (50 mils apart). With this arrangement of scales and indexes, the zero of the micrometer can be adjusted for use with either index, depending upon which side of the gun the quadrant is mounted on. The scales are graduated in 100-mil intervals from minus 200 to plus 600 mils, and are numbered from zero to minus 2 and zero to plus 6. The micrometer is graduated in 1-mil intervals from zero to 100 mils, and is numbered every 10 mils from zero to 90. One complete revolution of the elevating knob represents 100 mils and moves the scale indexes one complete division on the scales.

(2) Provision is made for illuminating the two scales, the micrometer indexes, and the level vial.

b. Operation.

(1) See that the Instrument Light M30 is plugged in the socket in the quadrant, and all lamp sockets are screwed in tightly to make contact. Turn the rheostat knob on the end of the body tube until the level vial, and indexes, are clearly seen.

(2) To aim the gun in elevation, first set off the elevation angle (obtained from the firing table) on the scale and micrometer.

(3) To set in plus angles (elevation), turn the elevating knob counterclockwise until the sum of the scale and micrometer readings equals the desired angle. To set in minus angles (depression), turn the elevating knob clockwise until the scale reading plus the difference between the micrometer reading and 100 mils equals the desired angle.

(4) Then elevate the gun with the handwheel until the bubble in the level vial is centered with respect to the graduations on its vial. The gun is now correctly elevated for the particular angle and range.

c. Adjustments.

(1) The Elevation Quadrant M9 is adjusted so that the scales and micrometer read zero, when the axis of the bore of the howitzer is level and the bubble in the level vial is centered, at the time the quadrant is assembled to the gun.

(2) If the adjustment has been disturbed, or it is desired to use the opposite micrometer index, level the bore of the gun with the gunner's quadrant placed on the breechblock. If either of the scales does not register zero when the bubble in the level vial is centered, loosen the two clamping screws at the ends of the scale and shift the scale until it registers zero. To adjust the micrometer to read zero when the scale reads zero, loosen the micrometer clamping nut on the elevating knob and, holding the knob to prevent turning the scale, slip the micrometer to register zero.

(3) To replace a burned-out lamp, loosen the small headless locking screw (screwdriver, 0.086-inch blade) which locks the knurled head of the lamp socket. Unscrew the lamp socket. The lamp assembly comes out with the socket. Replace the lamp assembly.

d. Care and Preservation.

(1) Keep the elevation quadrant covered when not in use to prevent dust and grit from collecting on the locating surfaces.

(2) Keep the cover on the level vial closed when not in use.

(3) Keep the felt pads at the ends of the segment pliable by occasionally applying a few drops of oil.

(4) Refer to paragraph 37 for general care and preservation instructions pertaining to sighting equipment.

84. PANORAMIC TELESCOPE M12, 90-MM GUN MOTOR CARRIAGE T71 (M36).

a. Description.

(1) The Panoramic Telescope M12 (fig. 69) has cylindrical locating surfaces at the top and bottom for centering the telescope in

SIGHTING AND FIRE CONTROL EQUIPMENT

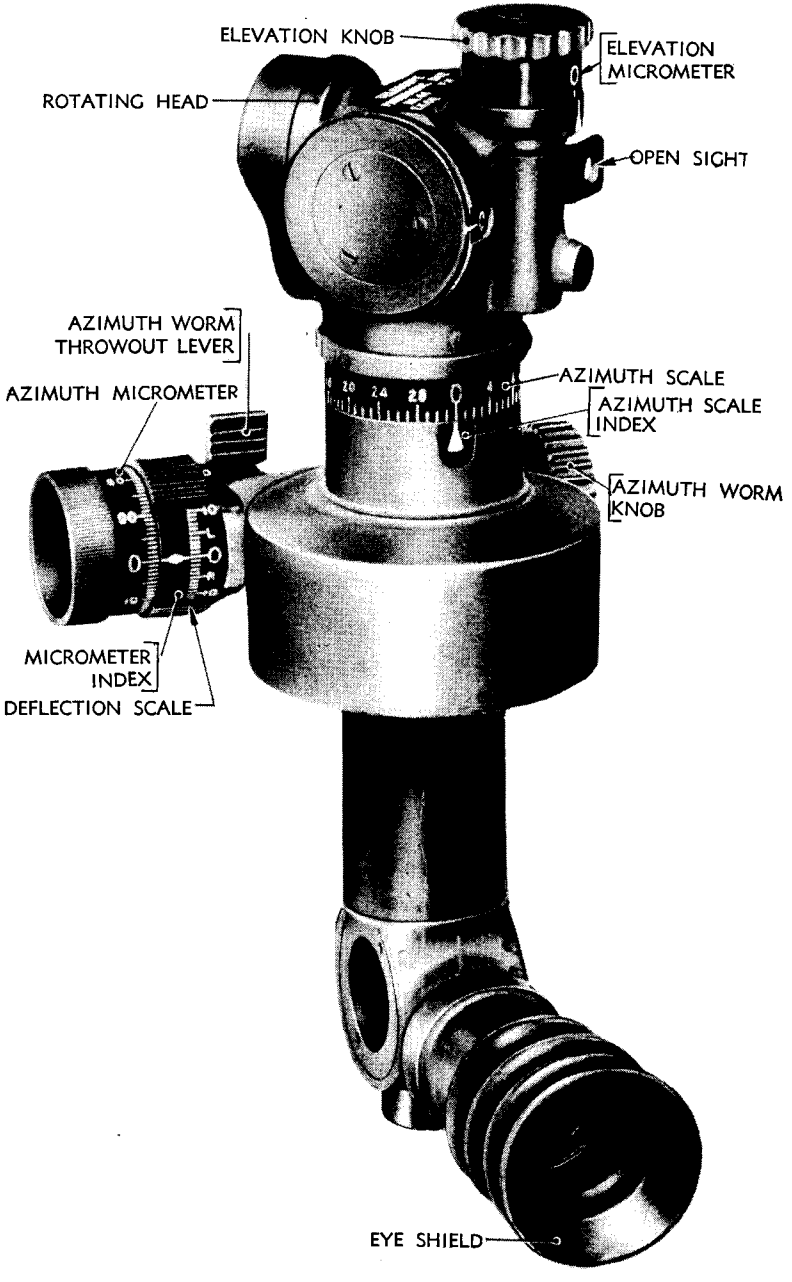

RA PD 42810

Figure 69 — Panoramic Telescope M12

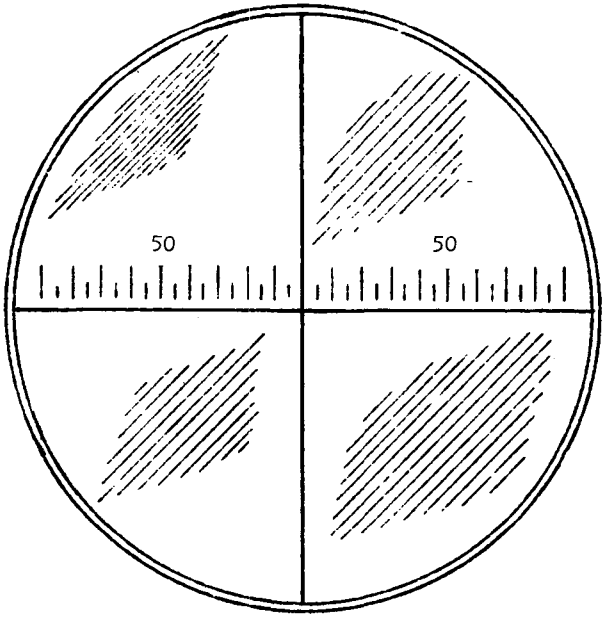

RA PD 57083

Figure 70 — Reticle Pattern for Panoramic Telescope M12

its socket. The reticle pattern which is seen when looking through the telescope is shown in figure 70. The line of sight is elevated or depressed by means of the elevating knob. Coarse and micrometer index graduations show the normal (zero elevation) position of the line of sight. The rotating head is moved in azimuth by means of the azimuth worm knob, which has a throwout lever to permit disengagement for rapid motion when required. The azimuth scale is graduated in 100-mil intervals, numbered progressively from zero to 32 in two consecutive semicircles. The azimuth scale reads zero when the eyepiece is offset 1,600 mils from the rotating head. Indications of the azimuth micrometer index on the azimuth micrometer, which is graduated in 1-mil intervals, supplement those on the azimuth scale. The micrometer index is assembled to a detent which causes a click at each 1-mil interval as the index is rotated. Rotation of the micrometer index is read as deflection right (R) or left (L) on the deflection scale.

(2) The Instrument Light M31 (fig. 64) is used to illuminate the reticle, scale, and micrometer indexes of the panoramic telescope, and the level vials on the mount for night operation.

(3) The Panoramic Telescope M12 is supported by the Tele-

scope Mount T104E1. Information on the telescope mount is not available at this time.

b. Operation.

(1) INDIRECT FIRE. Set off the azimuth of the target, with respect to the aiming point, on the azimuth scale and micrometer of the panoramic telescope. Traverse the gun carriage until the vertical line in the telescope reticle falls on the aiming point, keeping the cross level and longitudinal level bubbles centered at all times by means of their respective knobs. It may be necessary to rotate the elevating knob on the panoramic telescope in order to bring the aiming point within the field of view.

(2) CROSS LEVELING.

(a) The line of sighting through the panoramic telescope remains fixed in elevation or depression. But, if the gun is elevated or depressed with the carriage emplaced in such a position that the trunnions are out of level, the line of sighting will rotate in azimuth. This rotation will correct for the azimuth error introduced into the lay of the gun when the trunnions are out of level, provided that the telescope mount is kept cross leveled.

(b) It is therefore essential that the telescope mount be kept cross leveled at all times, otherwise the telescope reticle lines will erroneously move off the target as the gun is elevated, and an incorrect azimuth setting will be applied to the gun.

(c) Matching indexes on the cross leveling mechanism show when the telescope mount is in its normal position. If the gun carriage is level, the indexes will match when the cross level bubble is centered.

c. Test and Adjustment.

(1) The mechanisms of the sighting and laying equipment should be tested periodically for lost motion. Lost motion of the panoramic telescope in its socket (tangent adjusting screws too loose) is indicated if the telescope shifts in its socket under a light twisting pressure. Lost motion in the azimuth compensating mechanism of the telescope mount can be felt as a freedom or shake of the telescope socket. Lost motion in the micrometer mechanisms can be detected by operating the mechanism first in one direction and then in the opposite direction, returning both times to the same micrometer setting. If the telescope or level vial which is operated by the mechanism does not return to the same aiming point or level position, it is an indication of lost motion in the mechanism.

(2) The effect of small amounts of lost motion can be eliminated by habitually making the last movement always in the same direction. The last movement in setting and laying for deflection should be from left to right. The last movement in setting the scales should be in the direction of increasing the reading. Lost motion in the elevating

mechanism of the carriage can be taken up by moving the elevating handwheel against the greatest resistance.

(3) If an appreciable degree of lost motion exists in the sighting equipment, adjustment should be made without delay by Ordnance personnel. Qualified battery personnel are authorized to correct looseness of the panoramic telescope in the socket of the mount by adjustment of the tangent adjusting screws. Care must be exercised that there is no undue pressure by the tangent screws. The panoramic telescope should seat firmly without binding.

(4) If the azimuth scale and micrometer do not register zero simultaneously, loosen the three clamping screws in the azimuth micrometer knob and, while holding the knob to prevent turning the scale, slip the micrometer to read zero against its index.

(5) Bore sighting for verification and alinement of telescope mount and telescope is described in paragraph 86.

d. Care and Preservation.

(1) Refer to paragraph 37 for general care and preservation instructions pertaining to this equipment.

(2) The lubrication fittings on the telescope mount are not to be used by battery personnel. Do not apply lubricant through these fittings.

(3) Stops are provided to limit the longitudinal and crossleveling motions. No attempt should be made to force the mechanisms beyond the stops.

(4) Keep the level vials covered at all times when not in use.

(5) Disassembling of the equipment, other than such disassembling as is incident to normal operating procedure, is not permitted.

(6) When using the throwout lever of the panoramic telescope, push the lever all the way against its stops. If the lever is pushed only part of the way, the gear teeth inside the telescope will scrape against each other as the head is rotated, and will wear rapidly.

85. TELESCOPE M76F.

a. Description.

(1) The Telescope M76F is similar in appearance and is used in the same manner as the Telescope M71C described in paragraph 77. The principal differences are in the magnifying power and the field of view; the Telescope M67F is a 3-power instrument with a field of view of 21 degrees 30 minutes.

(2) The reticle pattern is identical to the reticle pattern for Telescope M71C (fig. 2) with the exception that the pattern for the Telescope M76F is smaller, and has the part number "7669503" etched on the reticle at the lower edge.

SIGHTING AND FIRE CONTROL EQUIPMENT

86. TELESCOPE MOUNT T92.

a. The Telescope Mount T92 which supports the Telescope M76F is identical to the Telescope Mount T90 described in paragraph 78, with the exception of a slight change in the mounting bracket and the positioning of the instrument light clamp on the mounting bracket. Neither of these changes affect the operation of the mount.

87. BORE SIGHTING.

a. General.

(1) The purpose of the bore-sighting operation is to test the alinement of the sighting equipment for parallelism with the bore of the gun, and to provide a basis for adjustment if the sighting equipment is found to be out of alinement. The operation is sometimes referred to as "zeroing," "targeting," or "adjustment of sights."

(2) Careful adjustment of the sighting equipment before going into action will greatly reduce the number of rounds wasted and the time consumed before getting a hit.

(3) Either of two kinds of testing targets may be used in the adjustment procedure for bore sighting: a well-defined fixed object (aiming point) at least 1,500 yards distant from the gun, or a testing target 80 to 120 feet distant.

(4) Bore sights, consisting of a breech bore sight and a muzzle bore sight are furnished with the gun.

b. Equipment for Bore Sighting.

(1) GUNNER'S QUADRANT M1. The Gunner's Quadrant M1 is provided for leveling the gun.

(2) TESTING TARGET. If a testing target is not available, construct one on cardboard or some other suitable material. To construct a testing target, first measure the horizontal and vertical distances (to the nearest one-sixteenth inch) that the optical center of each telescope is set off from the axis of the gun bore, and record the measurements as *right* or *left* and *up* or *down*. Then, draw horizontal and vertical intersecting lines on the cardboard or other suitable material to represent the gun bore, and mark the intersection "BORE AIMING POINT." Now, accurately lay off the recorded measured horizontal and vertical distances for each telescope, being careful to place the aiming point on the correct side of the "BORE AIMING POINT." Mark each aiming point for identification, such as "TELESCOPE M71C" or "PERISCOPE M10F." Label the top of the testing target "TOP" to avoid inverting the testing target accidentally when bore sighting.

(3) BORE SIGHTS. The line which passes through the center of the gun bore is chosen as the reference line from which all adjustments are made. The bore sights issued with the gun are used to

determine this line. The model of the gun for which it is to be used is engraved on the disk. A small peephole is drilled in the center of the disk. The muzzle bore sight includes a quantity of black linen cord to be stretched tightly across the muzzle, vertically and horizontally in the notches thereon, and a web belt to be buckled around the muzzle to hold the cord in place. If the issue bore sights are not available, the removal of the percussion mechanism from the breechblock and the use of the firing pin hole as a peep sight may be substituted for the breech sight. In lieu of the issue muzzle sight, crossed strings may be attached across the muzzle by securing them with a rubber band, string, tape, or web belt.

c. Preliminary Settings.

(1) It is important that the line through the cradle trunnions, crosswise to the gun, be fairly level for bore sighting. The leveling can be checked with a gunner's quadrant placed on the flat top surface of either trunnion cap. The trunnions will generally be level when the vehicle is on level ground. If the vehicle should be a tank resting on slanting ground, the turret can be traversed to bring the trunnion line into level. This leveling should not be disturbed during succeeding operations. Do not attempt to perform the bore sighting when the vehicle is resting on steeply sloping ground.

(2) Alinement of telescopes can be performed either by use of a testing target or by use of a sharply-defined distant aiming point. The use of a testing target establishes the telescope line of sighting parallel to the gun bore. The use of a distant aiming point results in a line of sighting which converges towards the line of the gun bore. The more distant the points, the more nearly parallel will be the line of sighting and the axis of the bore. If the aiming point is chosen about 1,500 yards or more distant, the line of sighting and the axis of the bore will be near enough to parallel for all practical purposes. Choice of method will depend on time and facilities available. The aiming point may be used whenever the testing target is not available, but its use is necessarily restricted to open terrain and clear weather. The testing target can be used at night, and requires only an open space of 120 feet or less.

(3) When using the testing target, line it up with the gun in the following manner:

(a) First, level the gun with the elevating handwheels, and check the leveling with the gunner's quadrant placed on the leveling plates on the breech ring.

(b) The testing target may be either hung from a support or mounted on a post. Place the testing target 80 to 120 feet in front of the gun. The more distant the target, the less will be the error produced by inaccuracies in constructing the target. Move the testing

target until the *bore* aiming point is seen through the bore sights, centered in the gun bore.

(c) While centering, keep the face of the testing target square with the bore. The horizontal edge of the target should be level. However, if the gun trunnions are slightly out of level, the horizontal edge of the target should be out of level by the same amount and in the same direction. This measurement is avoided by leveling the gun trunnions at the start. Check the verticality of the target with a plumb line.

d. Verification of Telescopes M71C and M76F. The Telescopes M71C and M76F are in adjustment when the cross (zero-range and zero-deflection) in the reticle pattern lines up with its aiming point. If the cross is to the right or left of the aiming point, loosen the two gib adjusting bolts in the rear of the telescope mount (fig. 61), and turn the lateral adjusting knob until the cross lines up with the aiming point. If the cross is above or below the aiming point, loosen the holder clamping bolt and turn the elevating knob until the cross lines up with the aiming point. Observe the lateral position of the cross with respect to the aiming point, and, if satisfactory, tighten the two gib adjusting bolts and the holder clamping bolt. After tightening the bolts, check to see that the adjustment has not slipped.

e. Verification of Periscope M10F or M10N.

(1) For verification of the one-power optical system, look through the observation window with the periscope in the viewing position and observe the position of the cross with respect to its aiming point (testing target or distant object). If the cross does not coincide with its aiming point, push in the one-power adjusting knobs (fig. 65), and turn them until it does. Release the knobs and check the setting. Record the setting on the notation label which is fastened to the periscope head.

(2) For verification of the six-power optical system, look through the eyepiece and observe the position of the cross with respect to its aiming point (testing target or distant point). If the cross does not coincide with its aiming point, push in the six-power adjusting knobs and turn them until it does. Release the knobs and check the setting. Record the setting on the notation label which is fastened to the periscope head.

f. Verification of Panoramic Telescope M12. Since the Panoramic Telescope M12 is supported by the Telescope Mount T104E1, and no information on this mount is available at this time, the bore sighting adjustments will have to be described in some future revision of this manual.

APPENDIX

Section XXV

SHIPMENT AND STORAGE

88. DOMESTIC SHIPMENT AND LIMITED STORAGE.

a. General. The 90-mm Gun M3 and materiel will be shipped and stored, mounted in their respective combat vehicles. Preparation of the gun for shipment and storage is the same.

b. Materials Required for Preparation for Shipment and/or Storage.

CLOTH, abrasive, aluminum-oxide
CLOTH, crocus
COMPOUND, rust-preventive, heavy
COMPOUND, rust-preventive, light
COMPOUND, rust-preventive, thin-film
ENAMEL, synthetic, lusterless, O. D.
PAPER, flint, No. 2/0
PAPER, greaseproof, wrapping
PAPER, waterproof, wrapping
PRIMER, synthetic, rust-inhibitive
SOAP, castile
SODA ASH
SOLVENT, dry-cleaning
TAPE, adhesive, nonhygroscopic
THINNER, paint, volatile mineral spirits.

c. Lubrication. Lubricate the gun and mount before shipment in accordance with Lubrication Order (figs. 23 and 24).

d. Painting. Painted surfaces that have become checked, pitted, or rusted must have the rust spots removed and the surfaces repainted.

(1) REMOVING RUST SPOTS. The following may be used in removing rust spots:

(a) Aluminum-oxide abrasive cloth is used for cleaning finished and unfinished external surfaces where wear of the parts cleaned will not affect the functioning of the mechanism.

(b) Crocus cloth is used for removing rust or stain and for polishing parts of the breechblock and firing mechanism and other finished surfaces of metal.

(2) APPLICATION OF RUST-INHIBITIVE SYNTHETIC PRIMER. Apply a liberal coating of the primer over the entire area of the cleaned surfaces to be repainted as follows:

(a) Brushing or Spraying. The primer should be used on bare metal as a base coat for synthetic enamel. It may be applied either

by brushing or spraying. The primer will brush satisfactorily as received or after the addition of not more than 5 percent by volume of volatile mineral spirits paint thinner. For spraying, the primer may be thinned with not more than 15 percent by volume of volatile mineral spirits paint thinner. Allow to dry thoroughly.

(3) SANDPAPERING SURFACES. Sandpaper the primed surfaces with grade No. 2/0 flint paper, and wipe all particles of dust from surfaces.

(4) APPLICATION OF ENAMEL. Apply coat of lusterless, olive-drab, synthetic enamel, and allow to dry thoroughly before the materiel is used.

e. **Cleaning.** The materiel shall be thoroughly cleaned and made free of all foreign matter as described in step (2), below.

(1) Partial disassembly of the breech and firing mechanism shall be in accordance with procedures outlined in paragraphs 44 and 61.

(2) Clean thoroughly all bright metal parts, including breech operating handle shafts, breech operating cranks, bushings, and similar unexposed machined surfaces, as well as the interior of the breech ring and bore of gun, with dry-cleaning solvent or with a soda ash or soap solution as follows:

(a) Apply dry-cleaning solvent by scrubbing with a brush or wiping with a clean cloth and then drying thoroughly.

(b) Apply a warm soda ash or soap solution by vigorously brushing or scrubbing the surfaces thoroughly until all traces of contamination have been removed. The surfaces shall then be rinsed with clean, hot water and thoroughly dried. Soda ash solution consists of one-half pound of soda ash in 2 gallons of warm water. Prepare soap solutions by dissolving castile soap or issue soap in chip form in hot water in the proportion of 1 pound of soap to 4 gallons of water.

f. **Application of Preservatives.** Preservatives should be applied immediately after cleaning and drying, as a rust stain will form if materiel is handled between operations. Rust-preventive compounds, light and heavy, used herein, must be heated for proper consistency before application.

(1) BREECH MECHANISM. Partial disassembly of the breech mechanism should be accomplished where possible, and parts dipped, sprayed, or brushed with light rust-preventive compound. After assembly of the breech, apply a coating of light rust-preventive compound to the exterior portion.

(2) GUN TUBE. Thoroughly swab the bore of the gun with light rust-preventive compound.

(3) EXTERIOR UNPAINTED SURFACES.

(a) Use thin-film, rust-preventive compound on exterior unpainted surfaces that are not highly finished, machined, or operating, and from which the preservative *need not be completely removed* before operation. This compound may be applied by brushing or spraying without heating or solvent dilution.

(b) Use heavy rust-preventive compound on exterior unpainted operating surfaces from which preservatives *must be completely removed* before materiel is placed in operation.

g. Sealing. Seal muzzle and breech with two layers of greaseproof wrapping paper and overwrap with waterproof wrapping paper. Tape securely with nonhygroscopic adhesive tape, and brush or spray thin-film, rust-preventive compound over tape to act as a sealer. If greaseproof paper is not available, use canvas or burlap impregnated with thin-film, rust-preventive compound, and tie or strap in place.

h. Covers. Install covers supplied with materiel and fasten securely.

89. LIMITED STORAGE INSTRUCTIONS.

a. Inspections. Inspections shall be made weekly while the materiel is stored, to note among other things, general condition, missing parts, and the need for repairs. If found to be corroding at any part, remove the rust spots (par. 88 **d** (1)) and treat with the prescribed preservative.

b. Removal of Preservatives. Remove all seals, tape, and waterproof and greaseproof paper. Remove preservatives using dry-cleaning solvent or a solution of soda ash or soap. Solutions of soda ash or soap should be used in lieu of dry-cleaning solvent. Dry thoroughly after application of cleaning material.

Section XXVI

REFERENCES

90. PUBLICATIONS INDEXES.

The following publications indexes should be consulted frequently for latest changes or revisions of references given in this section and for new publications relating to materiel covered in this manual:

a. Introduction to Ordnance Catalog (explaining SNL system) ..... ASF Cat. ORD 1 IOC

b. Index (index to SNL's) ..... ASF Cat. ORD 2 OPSI

c. Index to Ordnance Publications (listing FM's, TM's, TC's, and TB's, of interest to Ordnance personnel, OPSR, FSMWO's, BSD, S of SR's, OSSC's, and OFSB's, and including alphabetical listing of Ordnance major items with publications pertaining thereto) ..... OFSB 1-1

d. List of Publications for Training (listing MR's, MTP's, FM's, TM's, TR's, TB's, MWO's, SB's, WDLO's, and FT's ..... FM 21-6

e. List of Training Films, Film Strips, and Film Bulletins (listing TF's, FS's, and FB's by serial number and subject) ..... FM 21-7

f. Military Training Aids (listing graphic training aids, models, devices, and displays) ..... FM 21-8

91. STANDARD NOMENCLATURE LISTS.

a. **Ammunition.**

Ammunition for antiaircraft artillery ..... ORD 11 SNL P-5

Ammunition instruction material for antiaircraft, harbor defense, heavy field, and railway artillery, including complete round data ..... ORD 11 SNL P-8

Fuzes, primers, blank ammunition, and miscellaneous items for antiaircraft, harbor defense, heavy field, and railway artillery.. ORD 11 SNL P-7

b. **Armament.**

Gun, 90-mm, M3; mount, gun, 90-mm, T8; and mount, combination, gun, T99, T99E1, and T99E2 ..... SNL D-39

c. **Cleaning and Preserving.**

Cleaning, preserving, and lubricating materials; recoil fluids, special oils, and miscellaneous related items ..... ORD 5 SNL K-1

Soldering, brazing, and welding material, gases and related items ..... SNL K-2

d. **Sighting Equipment.**

Lights, instrument ..... SNL F-205

Mount, telescope, T90 (for 90-mm gun in medium tank T25, T26); and mount telescope, T92 (for 90-mm gun motor carriage T71) ..... SNL F-295

Periscopes, telescopes for periscopes, and direct sighting telescopes for use in tanks SNL F-235

Quadrant, elevation, M9 (T10) (for gun motor carriages, tanks and combination gun mounts M34 and M34A1) ..... SNL F-281

Quadrant, gunner's, M1 (mils) ..... SNL F-140

Setter, fuze, M14 (wrench); setter, fuze, M15 (for 75-mm howitzer); and setter, fuze, M17 (for 105-mm howitzer) ..... SNL F-245

Telescope, panoramic, M12 ..... SNL F-214

92. EXPLANATORY PUBLICATIONS.

a. Ammunition, general ..... TM 9-1900

b. **Armament.**

Tank gunnery ..... FM 17-12

c. **Army Regulations.**

Qualifications in arms and ammunition training allowances ..... AR 775-10

Range regulations for firing ammunition for training and target practice ..... AR 750-10

d. **Automotive Materiel.**

90-mm gun motor carriage T71 ..... TM 9-758

e. **Chemicals.**

Decontamination ..... TM 3-220

Defense against chemical attack ..... FM 21-40

REFERENCES

f. Cleaning and Preserving.

Artillery lubrication, general ..... OFSB 6-4

Cleaning, preserving, lubricating, and welding materials and similar items issued by the Ordnance Department ..... TM 9-850

Cold weather lubrication and service of artillery materiel ..... OFSB 6-5

Inspection of Ordnance materiel ..... TM 9-1100

Ordnance Maintenance: Star-gaging equipment, impression outfits and pressure gages ..... TM 9-1860

g. Sighting Equipment.

Armored force field manual, tank gunnery.... FM 17-12

Auxiliary fire control instruments (field glasses, eyeglasses, telescopes and watches) ..... TM 9-575

Sighting and fire control equipment for medium tanks ..... TM 9-730C-C1, TM 9-731A-C1, TM 9-731B-C1, TM 9-732A-C1, TM 9-750-C3, TM 9-753-C1, TM 9-754-C1, TM 9-759-C1

90-MM GUN M3 MOUNTED IN COMBAT VEHICLES

INDEX

A

Page

Accessories, list of 13
Ammunition
  authorized rounds 89
  care, handling, and preservation.. 88
  data 90
  general discussion, firing tables, and classification 85
  identification 87
  inserting 24
  lot number 87
  maintenance 45
  packing data and marking for shipment 93
  preparation for firing..... 89
  subcaliber 95
Artillery gun book..... 1
Authorized rounds
  data 90
  general 89
Automatic cocking lever 69

B

Batteries, replacement
  M31 108
  M33 104
Bore sighting
  general discussion and equipment 121
  preliminary settings 122
Breech
  closing 24
  opening 23
Breech mechanism
  cleaning 37
  general discussion 50
  preventive maintenance 44
Breech operating mechanism..... 77
Breech operating shaft..... 58
Breech ring
  description 50
  inspection 46
Breechblock
  general discussion 52
  inspection 47
  maintenance 55
  removal and installation
    breechblock 52
    crank 58

Page

Breechblock operating crank
  installation, maintenance, and removal 62

C

Cartridge case, marking for identification 87
Chain terminal crank 63
Cleaning
  all parts 37
  for shipment and storage..... 125
Cleaning, preserving, and lubricating materials
  general 35
  shipment and storage..... 124
Closing spring cylinder..... *62*
Cocking lever and seal, inspection.. 47
Controls and instruments..... 18
Cradles, inspection 48

E

Electric lamp, replacement in instrument lights
  M31 108
  M33 104
Elevating 25
Elevating controls 18
Elevating mechanism
  inspection 47
  preventive maintenance 44
Elevation quadrant M9
  adjustments; care and preservation 116
  description and operation..... 115
Equipment
  general discussion of auxiliary..... 85
  lubrication 36
  report of unsatisfactory..... 4
  servicing
    new 16
    used 17
Extractor plungers 58
Extractors
  general discussion 55
  removal, installation, and maintenance 57

INDEX

F Page

Field report of accidents 4
Firing controls 18
Firing mechanism
  adjustment 77
  cleaning 37
    general discussion 72
    inspection 48
    preventive maintenance 45
Firing pedal 72
Firing plunger
  general discussion and removal.... 69
  installation and maintenance..... 71
Firing solenoid, replacement..... 72
Firing spring..... 66
Firing spring retainer
  general discussion and removal.... 66
  installation and maintenance..... 67
Firing switch box 80
Firing switches 18
Firing the gun 25
Firing trigger
  function 8
  general discussion 80
Fuzes
  marking for identification..... 88
  preparation for firing..... 89

G

Gun
  data 7, 12
  description 4
  differences among models..... 7
  elevating and depressing..... 25
  identification 6
  inspection 46
  loading 23
  malfunctions of 48
  placing
    in firing position..... 21
    in traveling position..... 27
Gun mounts
  inspection 46
  used with gun M3..... 6
Gun recoil guard
  general discussion 71
  removal and installation..... 72
Gunner's quadrant M1..... 121

H

Handwheel, elevating 18

I Page

Instrument lights
  adjustment (M33) 104
  care and preservation (M33)..... 105
  description
    M30 108
    M33 104
  removal and operation
    M31 108
    M33 104
Instruments 21

L

Limited storage, inspection, and removal of preservatives..... 126
Loading the gun..... 23
Lubricants 36
Lubrication
  for shipment and storage..... 124
  general instructions 36
  service intervals and equipment for 36
Lubrication order 36

M

Maintenance instructions 35
Manual firing pedal..... 18
Manual traverse control handle..... 18
Mark or model (ammunition)..... 87
Materiel
  demolition of 34
  operation under unusual conditions 33
  servicing 16
Mounts
  inspection 47
  malfunctions of 49
Muzzle velocity data..... 12

O

Oil level, check in recoil cylinder.... 84
Oilcan points 43
Operating instructions 16
Operation under:
  unusual conditions 33
  usual conditions 21
Organizational spare parts 13

P

Painting
  artillery projectiles 88
  for shipment and storage..... 124

90-MM GUN M3 MOUNTED IN COMBAT VEHICLES

P — Contd. Page

Panoramic telescope
- description ... 116
- operation; test and adjustment ... 119
- verification ... 123

Percussion mechanism
- general discussion ... 64
- removal, installation, and maintenance ... 66

Periscope
- care and preservation ... 113
- description
  - holder ... 111
  - periscope ... 110
- disassembly and assembly ... 111
- general discussion ... 109
- operation and adjustment ... 112

Periscope body assembly ... 110

Periscope head assembly
- description ... 110
- removal ... 111
- replacement ... 112

Points to be serviced and/or lubricated by ordnance maintenance personnel ... 43

Power traverse control handle ... 18

Preserving materials
- application of ... 125
- list of ... 35

Preventive maintenance
- after and during firing ... 45
- before firing ... 44
- before traveling ... 46
- daily service ... 45
- weekly service ... 46

Projectile, marking for identification ... 87

R

Recoil cylinders
- filling ... 80
- inspection ... 48

Reports and records ... 4, 43, 1

Reticle pattern for:
- one-power optical system ... 110
- six-power optical systems ... 111
- telescope M71C ... 99

S

Sear
- general discussion and removal ... 67
- installation and maintenance ... 69

Page

Shipment and storage ... 124

Sighting and fire control equipment 97

Spare parts, organizational (*See* Organizational spare parts)—

Subcaliber ammunition (*See under* Ammunition)

T

Tanks, T25E1 and T26E1 ... 6

Telescope mount T90
- adjustments; care and preservation ... 103
- description and operation ... 102

Telescopes
- description
  - M71C ... 99
  - M76F ... 120
- removal, replacement, operation, adjustments; care and preservation ... 101
- verification ... 123
- (*See also* Panoramic telescope)

Testing target ... 121

Tools, list of ... 13

Traveling lock
- disengaging ... 23
- engaging ... 27

Traveling position ... 27

Traverse control handles
- commander's ... 21
- manual and power ... 18

Traversing mechanism
- inspection ... 47
- preventive maintenance ... 45

Tropical climates, operation under ... 33

Turret, traversing
- manual ... 26
- power ... 25

Turret lock
- disengaging ... 23
- engaging ... 31
- use ... 18

V

Verification, telescopes and periscopes ... 123

W

Weight-zone marking (ammunition) ... 87

RAPD27OCT44-25M PUBLICATIONS DEPARTMENT - RARITAN ARSENAL