# Leavenworth Papers

No. 13

# *Counterattack on the Naktong, 1950*

by Dr. William Glenn Robertson

**Combat Studies Institute**
U.S. Army Command and General Staff College
Fort Leavenworth, Kansas

**December 1985**

**Library of Congress Cataloging-in-Publication Data**

Robertson, William Glenn, 1944—
Counterattack on the Naktong, 1950.

(Leavenworth papers; no. 13)
Bibliography: p.
1. Naktong River (Korea), Battle of, 1950.
2. United States. Army. Infantry Division, 24th.
3. Korean War, 1950-1953—Regimental histories—
United States. I. Title. II. Series.
DS918.2.N35R63 1986 951.9'043 86-2637

For sale by the Superintendent of Documents, U.S. Government Printing Office, Washington, D.C. 20402

# Contents

Illustrations ..... v
Tables ..... vii
Symbols ..... ix
Preface ..... xi
Chapter
1. Retreat to the Perimeter ..... 1
2. The 24th Division Makes a Stand ..... 13
3. The Battle of the Naktong Bulge Begins ..... 23
4. The Counterattack Stalls ..... 39
5. The Fight for the MSR ..... 57
6. The Failure of Task Force Hill ..... 75
7. The Final Counterattack ..... 83
8. Lessons of the Battle ..... 103
Notes ..... 113
Bibliography ..... 133

# Illustrations

## Figures

1. U.S. Army infantry division (TOE No. 7N, July 1948) ..... 7
2. Typical North Korean infantry division (Far East Command—Research Supplement, 19 October 1950) ..... 21

## Maps (All maps are at end of text.)

1. The retreat of the 24th Division, 5 July—5 August 1950
2. The Pusan Perimeter, 5 August 1950
3. The sector occupied by the 24th Division, 5 August 1950
4. Situation, 1200, 6 August 1950, showing initial dispositions of the 34th Infantry, the North Korean attack, and Ayres' counterattack
5. Situation, 2400, 6 August 1950, showing afternoon movements and 19th Infantry counterattack
6. Situation, 2400, 7 August 1950, showing earlier American and North Korean counterattacks
7. Situation, 2400, 8 August 1950, showing the day's counterattacks
8. Situation, 2400, 9 August 1950, showing afternoon counterattacks
9. Situation, 2400, 10 August 1950, showing North Korean counterattacks
10. Situation, 2400, 11 August 1950, showing American counterattacks
11. Action on the main supply route, 12 August 1950
12. Situation, 2400, 12 August 1950
13. Operation to clear the main supply route, 13 August 1950
14. Task Force Hill's counterattack, 14 August 1950
15. Situation, 2400, 15 August 1950, showing North Korean counterattacks
16. Situation, 2400, 16 August 1950, showing North Korean counterattacks
17. Operational Directive Number One, 24th Division, 16 August 1950
18. Assault on Tugok and Obong-ni Ridge, 17 August 1950

19. Assault on Ohang Hill, 17 August 1950
20. American counterattacks, 17 August 1950
21. Situation, 2400, 18 August 1950, showing American counterattacks
22. The sector occupied by the 24th Division, 19—20 August 1950

# Tables

1. Troop list, 24th Infantry Division, 5 August 1950 ..... 14

# Symbols

## *U.S. Army*

| | 1950 | 1985 |
|---|---|---|
| Signal | S | |
| Engineer | E | |
| Ordnance-Maintenance | | |
| Quartermaster | Q | |
| Antiaircraft Artillery | | |
| A Displacing Unit | | |
| Friendly Axis of Advance | | |
| Enemy Axis of Advance | | |
| Friendly Units | | |
| Enemy Units | | |

Note: The unit symbology adopted for maps in this paper conforms to that in use in 1950. Elevations are in meters. Contour interval is twenty meters.

# Preface

One characteristic of virtually all large military establishments in the twentieth century has been their creation of a body of doctrinal material that in theory regulates the conduct of their future combat operations. Two sources, past experience and theoretical concepts, account for most of the intellectual underpinnings of this mass of military doctrine. Of great importance in the development of this doctrine is the analysis of actual operations that occurred during previous conflicts. This systematic analysis of past events usually results in the identification of doctrinal principles having potential validity in future wars. Military history, therefore, represents the raw material from which much doctrine is crafted.

The relationship between military history and military doctrine, however, extends beyond that of simply source and product. Military history also provides a methodology for determining the validity of a particular military doctrine in a particular situation. By critically examining specific historical data from a battle, campaign, or series of operations, the military historian can discover the answers to a series of pertinent questions: What was the prevailing doctrine at the time? Was the doctrine applied? What was the effect of application or nonapplication? As with all historical questions, definitive answers may not be available, making the historian's conclusions tentative at best. Yet even tentative conclusions may provide useful guidance to soldiers struggling with the age-old problems of doctrine writing and force development for future conflicts. If battle is the true test of doctrine, then military history is the means by which that truth may be discovered.

Of all the forms military history may take, operational accounts are among the most difficult to write successfully. First, there is the problem of focus. Does one concentrate upon the highest levels of command where the major decisions are made, upon the intermediate levels where the decisions are implemented, or upon the lowest levels where the cost of the decisions is exacted in lives and treasure? A complete account of a battle must encompass all of these areas in some way, but a successful mix is often elusive. Compounding the difficulty is a second problem—that of order. The nearer one approaches the top of the chain of command, the greater one finds a sense of order and rationality, or at least the appearance of such. But at the bottom of the chain, the entire world seems to be irrational and

utterly chaotic. An accurate representation of these opposing states is difficult to achieve in a coherent narrative.

The genesis of this paper was the decision by the Combat Studies Institute to study counterattack doctrine and operations in the Pusan Perimeter campaign that occurred in Korea during the summer of 1950. Preliminary investigation showed that the most concentrated series of American counterattacks during the perimeter fighting occurred during the action known as the First Battle of the Naktong Bulge, 6—19 August 1950. Prior to August, American and South Korean forces had been too pressed by the North Korean invaders to mount a coherent defense, much less initiate counterattacks. Withdrawal behind the Naktong River permitted both armies a brief respite from combat and the opportunity to establish a conventional line of defense with relatively secure flanks. When the North Korean 4th Division breached the Pusan Perimeter in the sector of the U.S. 24th Infantry Division on 6 August, it triggered an extensive series of counterattacks that lasted for the next two weeks. Those counterattacks and the doctrinal foundation supporting them are the subject of this paper.

From beginning to end, no matter how many units joined the fight, the 24th Division was the headquarters responsible for directing the counterattacks in the Naktong Bulge. Official division records are voluminous, though occasional gaps appear in the files of subordinate components. In contrast, personal accounts at the small-unit or individual levels are minuscule in number. No doubt a major effort to locate survivors would generate an inspiring and instructive tale of the courage, heroism, and suffering of the men who fought in the First Battle of the Naktong Bulge. Yet such is not the primary purpose of this paper. Rather, it focuses upon the levels of command that directed the battle—division, task force, and regiment. Only occasionally does the focus drop to the levels of battalion, company, and platoon—and then only to illuminate the problems encountered in executing decisions made at higher levels.

In order to analyze critically the actions of division and regimental commanders, the operations of battalions and companies must be studied in detail, because it was there, at the sharp end, that battle plans either succeeded or failed. Therefore, a concerted effort was made to determine the location of all company- or battery-size units for every day of the fight. Although little documentation exists below the regimental level, company-level location plotting proved feasible through the use of surviving documents and map overlays found in division files. Thus, the American troop dispositions for each day of the battle have been recreated from the division's own records, using information available to the division staff at the time. Similarly, depiction of North Korean troop movements is also derived from reports received by the division staff. The result of this process was a reconstruction of the divisional situation map at 2400 on each day of the battle, using only information available to the division staff by that hour. What the actual situation maps at division headquarters looked like is impossible to know at this date, but all of the information utilized in the

reconstructions was known by the hour in question. Many of these reconstructions have been included in this paper, both to facilitate understanding of the complex battle situation and to shorten the narrative.

Admittedly, use of official documents and situation maps to reconstruct an action omits much of the human element of battle and imposes an order on the proceedings quite invisible from the frontline positions. Nevertheless, contemporaneous official records, such as journals, messages, and especially situation maps (but not war diaries prepared after the fact) are crucial to reconstructing the progress of a battle from the perspective of a division headquarters and analyzing decisions of the higher commanders. Such is the purpose of this paper, and it is left to others to cover in full detail the story of the men in the rifle squads, both soldiers and marines. Their story merits telling, but it must be in a forum other than this.

Chapter 1 of this study describes the counterattack doctrine existing in 1950 and provides a brief summary of how the 24th Division came to be behind the Naktong in August. Chapters 2 through 7 describe the American operations in the First Battle of the Naktong Bulge, beginning with the initial battalion-size counterattack and concluding with the final coordinated push that erased the North Korean gains and restored the original defensive positions along the river line. Chapter 8 reviews the course of the operations in light of the prevailing doctrine on counterattack and suggests tentative conclusions.

The careful study of any battle or campaign yields lessons from the past that can light our way, however dimly, into the future. The First Battle of the Naktong Bulge is no exception to this rule and, indeed, is especially rich in historical examples relevant to current doctrine. This study, while primarily an analysis of counterattack doctrine from a divisional perspective, incidentally raises other important issues as well. Foremost among them are a wide range of questions concerning the employment of light infantry. On paper, the 24th Division was in August 1950 a heavy infantry division; in reality, it had been reduced by peacetime belt-tightening and operational losses to approximately the size of today's new light divisions, with a similar mix of weapons. Forced to fight in prime light infantry terrain, the division continued to operate with the mind-set of a road-bound heavy force. In contrast, the North Korean 4th Division, equally light, maneuvered freely through the roadless area. In addition to light infantry, other relevant issues raised by the study include the potential responses available to encircled forces, the use of ad hoc forces to protect a division's rear, and the lack of existing doctrine for skeletonized units. All of these issues represent fruitful areas of investigation and deserve studies of their own.

# Retreat to the Perimeter

1

Military theorists have long considered the offensive to be the decisive and, therefore, the most favored form of warfare. Only through offensive operations, it is argued, can the goals of a warring state be attained. Yet for every attacker, there must be a defender, if resistance is to be made. This defensive role is usually adopted reluctantly, since it represents most often a condition of weakness, either permanent or temporary. If the weakness is permanent, the defender seeks only to damage and delay the attacker's forces as much as possible in hopes of raising the cost of success beyond limits acceptable to the attacker. In such situations, the defensive stance becomes simply a means of self-preservation. If the defender's weakness is only temporary, however, the defensive form of warfare can serve a much greater end. Once again, the defender seeks to delay the attacker, but the time gained is utilized to accumulate reserves of troops and materiel that will ultimately be unleashed against the original attacker in a counteroffensive. Seen in this light, the defensive is the prelude to the offensive action believed necessary to achieve a decisive victory.[1]

Before any counteroffensive can be undertaken, the defensive battle must be won. On the tactical level, the defender must deploy his forces on critical terrain in such a way that the attacker's thrust is parried and hurled back, leaving defensive positions intact. But all too frequently, the determined attacker succeeds in penetrating the defender's position. Left unchecked, this penetration may grow rapidly in size and threaten not only adjacent units but also the entire scheme of defense. Defenders faced with such penetrations usually attempt counterattacks, either to eject the attacker from the defensive position or, at worst, to contain the penetration. The timing of such counterattacks is one of the most difficult decisions a commander must make. If made either too soon or too late, the counterattack may fail to check the enemy's momentum, and the defensive position will be lost. If made at just the right moment, when the attacker has lost momentum and is disorganized, the counterattack may succeed in restoring the integrity of the defensive position without undue loss. In this sense, counterattack may indeed be "the decisive element of defensive operations."[2]

U.S. Army defensive doctrine in 1950 clearly reflected the idea that defensive operations should have a greater end in view than simply parrying

enemy blows. In the opening sentence of chapter 9, "The Defensive," the Army's Field Manual 100—5, *Field Service Regulations, Operations*, stated: "The general object of defensive combat is to gain time pending the development of more favorable conditions for undertaking the offensive, or to economize forces on one front for the purpose of concentrating superior forces for a decisive action elsewhere." Once the defensive battle was concluded successfully, U.S. forces would assume the offensive in order to render the enemy's units ineffective and destroy his will to resist. In operational terms, therefore, the successful defensive operation would lead inevitably to a counteroffensive.[3]

The edition of FM 100—5 published in 1949 outlined specific recommendations for the defender. First, the defensive position should be selected and organized so as to be held at all costs. Next, the main battle position should be screened by a covering force and supported by strong mobile reserves that could be made available instantly for a counterattack. When battle was joined, the covering force would confuse, delay, and disorganize the attacker prior to his reaching the main battle position. Once there, the attacker would be met by the maximum firepower available to the defender, who would use terrain to assist the defense. Yet even if all these steps were executed perfectly, the manual recognized that the defender's best efforts might be insufficient to prevent hostile forces from entering the defensive position.[4]

In case a penetration occurred, the alert defender should have a series of counterattack plans readily available, although FM 100—5 acknowledged that such plans could not be minutely detailed. A limited infiltration by relatively weak forces that had not occupied critical terrain could be isolated and easily destroyed by fire. A penetration by somewhat larger units that had seized critical terrain should be met by a counterattack force consisting of local reserves. A more serious penetration would have to be referred to a higher echelon, where a more elaborate counterattack plan would be prepared. Although the timing of the counterattack could not be predetermined, it should be implemented at that critical moment when the enemy was in greatest disarray, when his momentum had lessened, and when his units and fire support had become disorganized.

In theory, the counterattack force should consist of all combat arms. If armor were available, it should lead the counterattack and be supported by infantry, which would exploit any success gained. No matter what forces were utilized, they should be controlled by a single counterattack commander. Simply stated, his goal was to "close the gap created by the hostile force and to isolate and destroy the enemy's advanced elements." This result could be achieved in two basic ways. In the more common type of counterattack, the enemy would be struck in the flank, causing him to withdraw from his lodgment or be destroyed. A favorable axis of advance would be required for this type of counterattack to be successful. The second type of counterattack would be applicable to a more fluid defensive scheme, in which units would maneuver "to trap and destroy the penetration at a point particularly favorable to the counterattack." While a greater degree of prior planning

would be required in this case, the counterattack itself would be more limited in character. No matter which type of response was chosen, the counterattack was seen as a "vital element of defensive action."[5]

The doctrine published in FM 100—5 was essentially a digest of lessons derived from American combat experience in World War II. It was tailored to the standard triangular divisional system of that conflict, in which three infantry regiments, each consisting of three battalions, constituted the primary fighting power of an infantry division. The war had also shown that certain supporting units normally controlled by higher echelons profitably could be attached directly to a division. As a consequence, revised tables of organization and equipment (TOE) were published in 1947—48 that significantly strengthened the basic infantry division in terms of firepower. Under the new TOE, each infantry regiment received a heavy mortar company (twelve 4.2-inch mortars) and a tank company (twenty-two tanks), while the division as a whole was augmented by a heavy tank battalion (seventy-one tanks). Supporting the infantry and armor were four field artillery battalions (each with three firing batteries), along with an antiaircraft artillery battalion, an engineer combat battalion, a medical battalion, and various other support units and detachments. The aggregate strength of this reorganized infantry division stood at 18,804 officers and men, an increase of over 4,500 troops from the infantry division of World War II.[6]

Unfortunately, the new TOEs represented an ideal unattainable in the peacetime climate of the late 1940s. The complacent national mood, budget restrictions, and low enlistment rates had combined to lower Army strength by June 1950 to only 591,487 troops, barely one-tenth of the World War II total. Of these troops, ten combat divisions provided most of the Army's war-fighting capacity, but only one of them, the 1st Infantry Division in Germany, had its full complement of soldiers. All of the other divisions were organized under a skeletonized system that omitted up to one-third of a division's maneuver elements and much of its supporting firepower. Infantry divisions lacked one battalion in each regiment, and each field artillery battalion had only two firing batteries. Instead of a heavy tank battalion and three regimental tank companies, infantry divisions contained only one tank company. The antiaircraft battalion was also represented by only one battery.[7]

Strength was not the only shortcoming evident in the U.S. Army of 1950. Weapons development had been slow since 1945 and procurement even slower. Units in the field, therefore, were armed with the same basic weapons used to fight World War II: M-1 rifles; BARs (Browning Automatic Rifles); .30- and .50-caliber machine guns; 2.36-inch rocket launchers; mortars of 60-mm, 81-mm, and 4.2-inch caliber; and howitzers of 105-mm and 155-mm. Although the new M-26 Pershing tank had appeared in limited quantities as early as 1945, most tanks in service were either variants of the M-4 Sherman medium tank or the M-24 Chaffee light tank. Food, clothing, and medical supplies were available in adequate quantities, but stocks of spare parts and ammunition had reached dangerously low levels.[8]

As might be expected, equipment and ammunition shortages had a detrimental impact upon training, which suffered from other maladies as well. In order to entice into the service enough young men to maintain even its reduced strength, the Army had attempted to make a military career more attractive. This was partially accomplished by permitting recruits wide latitude in the choice of a branch or specialty. Such a policy, however, inevitably led to reduced numbers of recruits in the less desirable combat arms, such as infantry. Moreover, many of the rigors of traditional army training and conditioning exercises were reduced or eliminated. Combat simulation was seldom attempted, since it was potentially dangerous to those involved, and accidents would adversely affect public opinion. In addition, most of the units stationed overseas were engaged in occupation duties not requiring a high degree of combat proficiency.[9]

The four infantry divisions in the Far East Command that garrisoned Japan mirrored the Army's state of unreadiness in all respects. The authorized peacetime strength for each of these divisions was 12,500 men, leaving each division short over 6,000 men, 1,500 rifles, three rifle battalions, six heavy tank companies, and four field artillery batteries. As a result, each division could deploy no more than two-thirds of its wartime infantry and artillery firepower and only 14 percent of its tank firepower. Since no new equipment had been received by Far East Command since World War II, the equipment available was warworn and, in many cases, maintained only with the greatest difficulty. In fact, 90 percent of the weapons and 75 percent of the vehicles in Japan had been salvaged from materiel left on Pacific battlefields at the end of the war. Ammunition stocks in Japan amounted to no more than a forty-five-day supply. Training had been hindered by administrative duties incident to occupation, the lack of adequate training areas in Japan, inadequate leadership among battalion- and company-level officers, and the low quality of recruits received from the United States. Although a more realistic combat training program was underway by the spring of 1950, the units of the Far East Command were "flabby and soft, still hampered by an infectious lassitude, unready to respond swiftly and decisively to a full-scale military emergency."[10]

Such an emergency would be thrust upon the United States and its military forces in June of 1950. The crisis occurred in Korea, which long had been a pawn of its larger and more powerful neighbors. Controlled by Japan since the early days of the twentieth century, Korea had been divided into occupation zones by the victorious Allies in 1945. North of the 38th Parallel, the Soviet Union disarmed Japanese troops and established order, while south of that line, the United States did the same. As tensions grew between the occupying powers, American efforts to establish a united Korea failed. In 1947, the United States sought a solution in the United Nations that established a temporary commission to oversee free elections in both zones of occupation. When the Soviet Union denied the UN Commission entry into its zone, elections were conducted only in the south. The balloting resulted in the establishment of the Republic of Korea (ROK) under the leadership of President Syngman Rhee in August 1948. The United States

then sent economic, technical, and military aid, turning Rhee's government into a protégé, but not an ally. American military units departed Korea in 1949, leaving only a small military advisory group to supervise the aid program.[11]

North of the 38th Parallel, the Soviet Union was instrumental in the formation of the Democratic People's Republic of Korea, with Kim Il Sung installed as premier in September 1948. Although Soviet combat units were withdrawn from Korea, the Soviet aid program focused on creating a strong North Korean military capability. As that capability grew, North Korea in late 1948 began to foment internal disorder in South Korea. Friction between the two Koreas intensified, and clashes along the 38th Parallel became commonplace in 1949. By June 1950, a North Korean People's Army of ten infantry divisions, two independent infantry regiments, and an armored brigade was poised on the border of South Korea. Trained and equipped by the Soviet Union, this powerful force contained large numbers of combat hardened Koreans who had recently been released from service with the Chinese Communist Forces. This force was supported by a five-brigade Border Constabulary of 18,000 men. All told, North Korea could deploy approximately 135,000 ground troops against its neighbor to the south.[12]

Opposing the North Korean People's Army was the Republic of Korea Army of approximately 98,000 men organized in eight divisions, half of which were understrength. While the North Koreans could deploy 150 T-34 tanks and considerable quantities of medium artillery, South Korean forces had no tanks or medium artillery whatsoever. Nor could South Korea field any fighter or bomber aircraft to counter the 110 combat planes available to support the North Korean ground forces. Although outfitted with the same infantry weapons as U.S. forces in Japan and trained by the small U.S. Military Advisory Group, the ROK Army was by no means ready to repel an invasion across the 38th Parallel in the summer of 1950. Unfortunately, American military authorities at the time did not recognize this and generally believed that South Korea's armed forces were adequate to meet any conceivable threat from North Korea.[13]

When the North Korean People's Army stormed across the 38th Parallel on 25 June 1950, it soon became apparent that the ROK Army was woefully unprepared to resist a full-scale invasion. Although some ROK units fought well with the limited equipment available to them, others withdrew in disorder, opening wide gaps in the defensive line. The U.S. Military Advisory Group barely escaped the capital city of Seoul before it fell on 28 June. When the Han River line was breached two days later, there seemed to be little hope of halting the invasion before most of the country was lost.[14]

The United States government was totally unprepared for the disaster befalling the Republic of Korea. For some time, it had assumed that the only possible conflict would be a global war, and most planning had been devoted to that single contingency. Western Europe had received first priority in both personnel and equipment, leaving the Far East with lower levels of both. Nevertheless, General Douglas MacArthur, Commander in Chief, Far

East Command, was willing to use the limited means at his disposal to assist the South Korean government in repelling the invasion. American air and naval units were immediately thrown into the fight, but they soon proved insufficient to halt the North Korean drive. On 30 June, President Harry Truman authorized MacArthur to commit U.S. ground forces to the struggle, a move that MacArthur had recommended earlier. As a result, at 0315 on 1 July, Eighth Army ordered the 24th Infantry Division to Korea.[15]

In some respects, the 24th Division, commanded by Maj. Gen. William F. Dean, was an unfortunate choice. Of the four divisions in Japan, it had both the lowest aggregate strength (12,197 men on 30 June) and the lowest combat effectiveness rating (65 percent on 30 May). Like the other units in MacArthur's Far East Command, its troops were not trained and equipped for sustained combat, nor even conditioned for rigorous physical activity. Only about 15 percent of its officers and men were combat veterans. Moreover, the division lacked three infantry battalions and four field artillery batteries. A single company of M-24 Chaffee light tanks served as its only armor. Since similar shortcomings were present in all of his divisions, MacArthur chose the 24th Division solely on the basis of its location. Stationed in southern Japan, the 24th was the nearest division to Korea and, thus, could be deployed rapidly to that country. Several thousand men were transferred to the 24th Division from other units, raising its strength to 15,965 men by the time of its departure (see figure 1).[16]

The order committing the 24th Division to action provided initially for the deployment of a small combat force by air, while the remainder of the division followed by water. The initial force of two reinforced companies, known as Task Force Smith, arrived at Pusan on 2 July and moved north in an effort to delay the enemy's advance. By 5 July, most of the 24th Division had reached Korea. On the same day, North Korean armor crushed Task Force Smith north of Osan. Realizing the gravity of the situation, General Dean rushed his 19th, 21st, and 34th Infantry regiments forward to establish a series of blocking positions. One by one, these positions—at Ch'onan, Chonui, and Choch'iwon—were outflanked or overrun, and the 24th Division reeled backward in retreat. After one week of fighting, the division had suffered heavy casualties, including 1,500 men missing in action. The 21st Infantry numbered only 1,100 men, less than 50 percent of its authorized strength, and the 34th Infantry was operating under its third commander. Division strength on 14 July stood at 11,440 men (see map 1).[17]

As July progressed, disasters continued to strike Dean's command. In a series of actions at the Kum River on 14—16 July, the North Korean 3d and 4th Divisions again outflanked the defenders. The 63d Field Artillery Battalion supporting the 34th Infantry was destroyed, while the 52d Field Artillery Battalion supporting the 19th Infantry lost eight howitzers. The 19th Infantry lost two commanders before escaping from the trap. Several days later, a similar debacle occurred when the same two regiments were routed at Taejon. In that action, the 24th Division lost 1,150 men out of 3,933 engaged, including General Dean, who was taken prisoner. In some units, the losses were staggering: Company L of the 34th Infantry lost 107

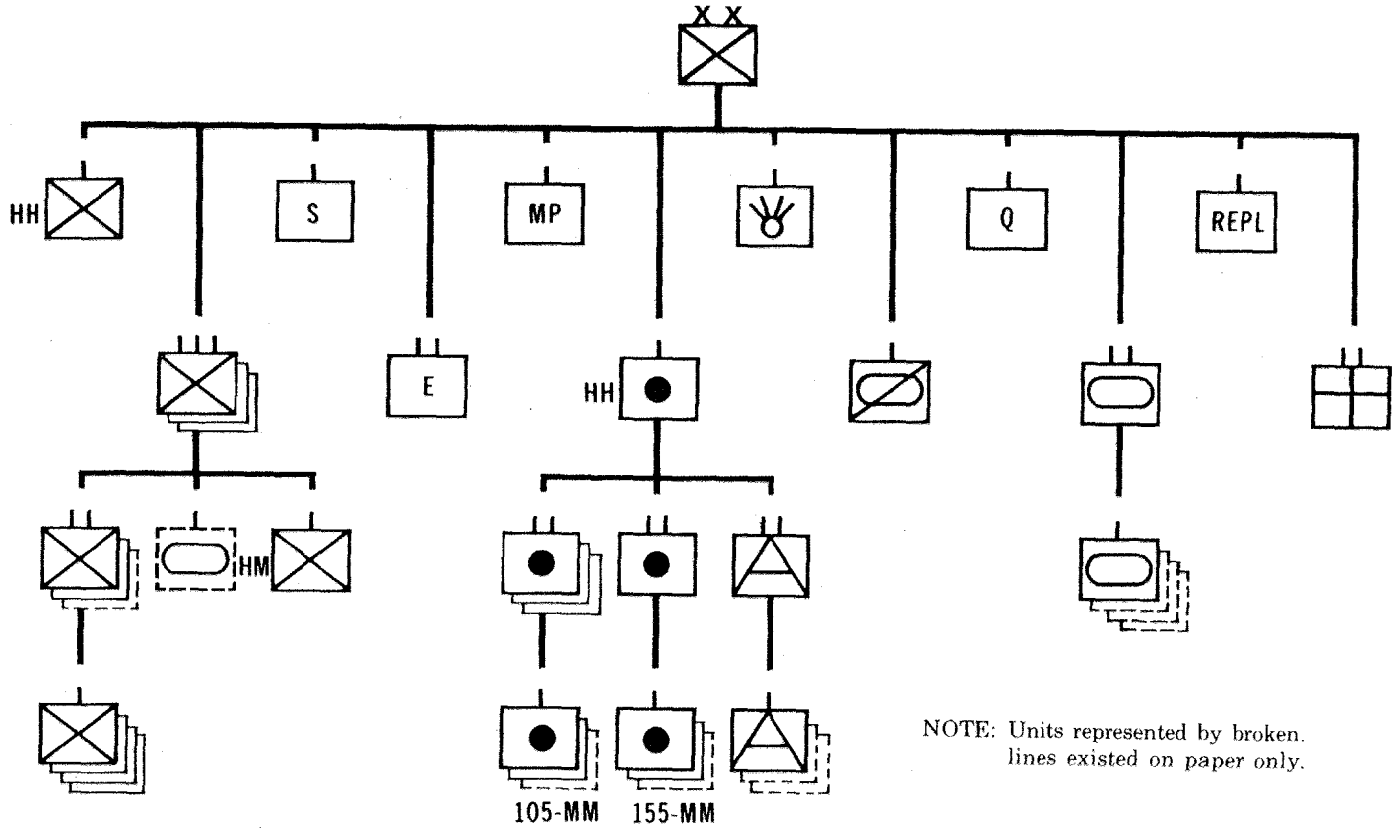


Figure 1. U.S. Army infantry division (TOE No. 7N, July 1948)

men out of 153 engaged, Battery A of the 11th Field Artillery Battalion lost all of its 155-mm howitzers, and the 24th Quartermaster Company lost thirty out of thirty-four trucks.[18]

By the time the 24th Division was relieved by the 1st Cavalry Division on 22 July, its strength had been reduced to 8,660 men. During the previous seventeen days, it had been driven back 100 miles by elements of two North Korean divisions. It had suffered over 30 percent casualties, including an especially heavy toll of field grade officers. In addition, more than 2,400 men were missing in action, among them the division commander. During the long retreat, most of the division's equipment had been destroyed or abandoned. Their morale weakened by constant retreats, their strength sapped by dysentery and the heat of the Korean summer, the men of the 24th Division badly needed time to rest and refit before again entering the fight.

The ordeal suffered by the 24th Division brought to light many problems that had been minimized or overlooked in the relative complacency of peacetime. Equipment shortages that had not seemed serious for a division on occupation duty—the lack of telephone wire, radio batteries, and mortar ammunition—proved to be critical. The available maps frequently proved to be inaccurate, an especially serious problem when plotting artillery fire. Furthermore, garrison duty in Japan had not physically conditioned troops for operations in a mountainous terrain in midsummer. The large number of officer casualties also exposed the Army's lack of depth in seasoned combat commanders, and inexperienced replacements had to learn their trade under fire.[19]

Of even greater importance than the Army's physical deficiencies was the fact that Army tactical doctrine was based upon full-strength units organized under a triangular system of maneuver elements. The doctrine manuals presupposed that each regimental commander would be able to deploy three battalions, the normal configuration being two battalions in the line, while one remained in reserve. With only two battalions at its disposal, a regiment either had to reduce its frontage to battalion width or operate with no reserve. No matter which course was adopted, the regiment's tactical integrity was gravely impaired. The flexibility inherent in the triangular system was lost, and flanks became much more difficult to protect. No American officers in Korea had previous experience with such a tactical system, nor had the Army schools produced a modified doctrine more applicable to a two-battalion regiment. Commanders and staffs at every echelon had assumed that the peacetime formations would have their missing components restored before being committed to action, but this assumption proved false in the summer of 1950.[20]

On the day following its relief by the 1st Cavalry Division, the 24th Division received a new commander, Maj. Gen. John Huston Church. A veteran of both world wars and holder of the Distinguished Service Cross, Church was no stranger to the situation confronting the 24th Division. He had been in Korea since 27 June, first leading the GHQ Advance Command

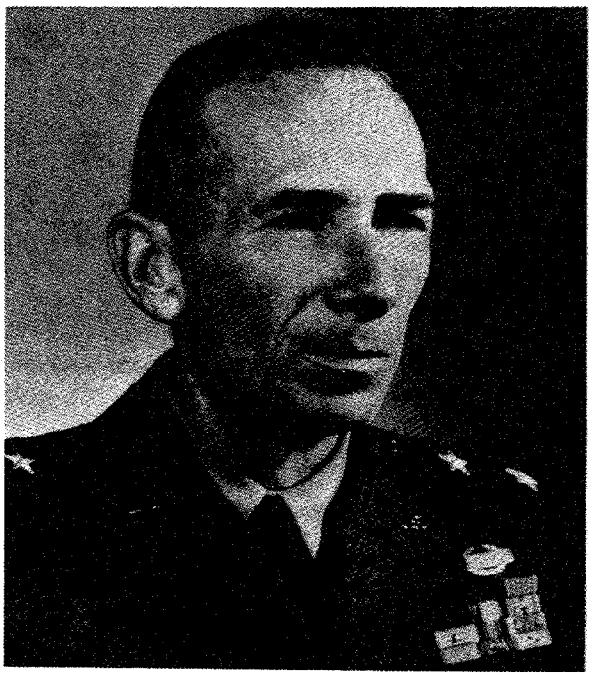

Maj. Gen. John H. Church, Commander, 24th Infantry Division

and Liaison Group (ADCOM) as MacArthur's personal representative and later serving on General Dean's staff in a similar capacity. Promoted to major general on 18 July, the slim and taciturn Church hoped to have a few days grace in which to restore the battered 24th Division to fighting trim.[21]

On 22 July, Eighth Army assigned the 24th Division to Army reserve status, with residual responsibility for protecting an airfield near P'ohang-dong on Korea's east coast. On 24 July, after only one day's respite, Lt. Gen. Walton Walker, Eighth Army commander, ordered the division to shift southward to counter a North Korean flanking drive in the vicinity of Chinju. Leaving the 21st Infantry at P'ohang-dong under Eighth Army control, the 19th and 34th Infantry regiments moved into positions around Chinju and Ko'chang respectively (see map 2). Action flared at both locations during the last three days of July as the North Koreans continued to gain ground at the expense of the 24th Division. In hopes of stabilizing the situation, Eighth Army returned the 21st Infantry to division control and that regiment relieved the 34th Infantry in the line on 31 July. So badly mauled by the North Koreans at Taejon that it had temporarily "lost its entity as a striking force," the 34th passed into division reserve.[22]

In the face of continued North Korean pressure, General Walker on 1 August ordered a phased withdrawal of Eighth Army behind the Naktong River. This maneuver would shorten Walker's front, while utilizing the natural barrier of the Naktong to shield the major port of Pusan. As part of the plan, the 24th Division, which had been thinly spread covering Eighth

Army's southern flank, began to concentrate its regiments in a sector stretching twenty-two airline miles northward from the junction of the Nam and Naktong Rivers. The 25th Division assumed responsibility for the sector south of the 24th, while the 1st Cavalry Division extended the line to the north. The redeployment was to be completed during the night of 2—3 August.[23]

Although the constant retreats had been necessary, Walker feared that Eighth Army was losing whatever aggressiveness it once may have had. As early as 29 July, he had issued to officers of the 25th Division a ringing "stand or die" statement, which had been quickly circulated to other Eighth Army units as well. Walker announced that reinforcements were en route to Korea but that he could no longer trade space for time. With its back to the sea, Eighth Army would have to hold its ground until help arrived.[24] Now, on 2 August, in the midst of still another retrograde movement, Walker dispatched to all maneuver units a message regarding counterattack:

> Prior to assumption of the offensive, daily counterattacks will be made by all units to keep the enemy off balance, disorganized, and prevent him from launching a coordinated attack against our positions. Recent operations by ROK forces have demonstrated the value of frequent counterattacks to regain lost portions of the battle position and delay further advances of the enemy. Counterattack is a decisive element of the defense. The success of a counterattack depends largely upon surprise, boldness, and speed of execution.[25]

For several days, the 24th Division had little or no opportunity to counterattack as it completed its withdrawal behind the Naktong. First to move was the 34th Infantry, which crossed the river on 2 August and was in position west of Yongsan by 2300. The 21st Infantry and the attached 17th ROK Regiment, which had been serving as rearguard, disengaged during the evening and followed the 34th across the river. Shortly after the last units reached the east bank on the morning of 3 August, engineers demolished the Koryong-Taegu bridge. The only other span in the division sector, on the Ch'ogye-Ch'angnyong road, had been destroyed on the previous evening. With both bridges down, the Naktong became a moat behind which all elements of the 24th Division concentrated. Division forward headquarters was located at Ch'angnyong, and division rear moved northward from Masan to Miryang. By the evening of 3 August, all division units had reached the new sector except the 19th Infantry, which had just been relieved near Masan by 25th Division units and was en route north by rail and motor.[26]

The Eighth Army's withdrawal behind the Naktong River line in early August marked a new phase in the Korean conflict. Previously, Walker's divisions had operated independently, with their flanks unprotected, a situation not envisioned by the doctrinal manuals of the day. Unfortunately, this method of operations had facilitated flanking maneuvers by North Koreans. The concern by American units for their flanks had contributed heavily to their tendency to retreat more hastily than their commanders desired. Now, for the first time, the land area held by American and ROK

forces had contracted to the point that a more or less continuous defensive line could be formed to shield the port of Pusan. The resulting Pusan Perimeter ran northward approximately 100 miles from the Korea Strait, then eastward 50 miles to the Sea of Japan. The western face of the perimeter was held by American units. From south to north, they were the 25th Division around Masan; the 24th Division behind the Naktong covering Ch'angnyong; and the 1st Cavalry Division, also behind the Naktong in the vicinity of Waegwan. Extending the line eastward to the coast were the remaining elements of the ROK Army. With its flanks momentarily secured and with a few reserves in place, Eighth Army faced the continuing North Korean assaults with greater confidence than before.[27]

# The 24th Division Makes a Stand

2

The sector of the Pusan Perimeter occupied by the 24th Division in August 1950 extended from the junction of the Nam and Naktong Rivers northward along the Naktong to the vicinity of the village of Hyonp'ung. The distance from the Nam to Hyonp'ung by air was twenty-two miles, but via the twisting course of the Naktong, it was thirty-four miles. Although the river flowed through a valley that averaged 1,000 meters in width, the stream itself averaged no more than 350 meters across. The depth of water normally ranged between 1 and 3 meters. Peacetime traffic had crossed the Naktong in the 24th Division's sector via the Ch'ogye-Ch'angnyong bridge and several small ferries, but such means were no longer available. The low water levels existing in the summer of 1950 exposed a number of areas fordable on foot, but the steep banks prevented vehicles from crossing without engineer preparation of the approaches (see map 3).[1]

The valley of the Naktong in the 24th Division sector was flanked on both sides by hill masses averaging 200 meters in height but which occasionally rose above 300 meters. Although individual crests might be slightly taller than those facing them across the valley, seldom was the difference in elevation great enough to confer a significant military advantage. Only at the far northern end of the sector, where a 408-meter hill stood on the east bank, was the terrain on one side of the valley dominated by that on the other. Elsewhere, the only notable difference between the valley walls was the presence of more gullies leading down to the river on the eastern side than on the western. All of the hills were bare except for occasional clumps of grass and scrub pine.[2]

The width of his sector, the presence of the river, and the weakness of the 24th Division all influenced General Church in the preparation of his defensive dispositions. His plan called for the river front to be lightly held by units of platoon size or smaller, with gaps being covered by observation in daylight and by patrols at night. Regiments were to maintain local reserves well forward, while a mobile general reserve would be established farther to the rear. Defensive positions, both primary and alternate, were to be entrenched to the maximum extent possible. Minefields were to be placed at all possible crossing points. All boats and ferries were to be destroyed, except a handful needed for patrolling. No civilians were permitted

to cross the Naktong, and all residents were to be evacuated from the area between the river and the north-south road passing through Ch'angnyong and Yongsan.[3]

During the period 2 to 5 August, all elements of the 24th Division reached their assigned positions within the division sector. To implement his defensive plan, Church placed primary reliance on his major infantry components, the 19th, 21st, and 34th Infantry regiments, each of which contained only two weak battalions. In addition, the division maintained operational control of the 17th ROK Regiment. These units took positions in the line in the order in which they arrived. Two engineer combat battalions, the 3d and 14th, provided engineer support. Four field artillery battalions were also available, though none had more than two firing batteries, and two had only one battery each. The 78th Heavy Tank Battalion was represented solely by Company A, and the 26th Antiaircraft Artillery Battalion had only Battery A present (see table 1).[4]

Table 1. Troop List, 24th Infantry Division, 5 August 1950

*Division Troops*

- Headquarters and Headquarters Company
- 19th Infantry
- 21st Infantry
- 34th Infantry
- 11th Field Artillery Battalion
- 13th Field Artillery Battalion
- 52d Field Artillery Battalion
- 63d Field Artillery Battalion
- Company A, 78th Heavy Tank Battalion
- Headquarters Battery, 26th Antiaircraft Artillery Battalion (Automatic Weapons)
- Battery A, 26th Antiaircraft Artillery Battalion (Automatic Weapons)
- 3d Engineer Battalion (Combat)
- 14th Engineer Battalion (Combat)
- 24th Reconnaissance Company
- 24th Military Police Company
- 24th Quartermaster Company
- 24th Signal Company
- 24th Replacement Company
- 724th Ordnance Maintenance Company
- 24th Medical Battalion
- 24th Division Medical Detachment
- 24th Division Band

*Attached Troops*

38th Ordnance Maintenance Company

34th Ordnance Field Depot Company

Headquarters and Headquarters Detachment, 66th Ordnance Battalion

8076th Surgical Hospital

55th Engineer Company

2d Engineer Construction Group

*Operational Control*

17th Republic of Korea Infantry Regiment

At 1800 on 5 August, the ration strength of the 24th Division was 9,882 division troops, 486 men attached, and 2,000 ROK soldiers, for a grand total of 12,368. Even in its skeletonized form, the division had serious equipment shortages. Missing weapons included two 105-mm and four 155-mm howitzers, thirteen 4.2-inch mortars, sixty-eight 3.5-inch rocket launchers, 103 BARs, fifty-five 57-mm recoilless rifles, seven 75-mm recoilless rifles, and sixteen M-24 tanks. Division transportation lacked 335 1/4-ton trucks, eighty-five 3/4-ton trucks, eighty-one 2 1/2-ton trucks, seventeen dump trucks, six 4-ton trucks, three repair trucks, 158 1/4-ton trailers, and 105 1-ton trailers. Ammunition stocks were low in all categories, and the shortage of 4.2-inch mortar rounds was especially critical. Illuminating rounds in all calibers were scarce, making it impossible to keep the river under close observation at night. Shortages of tools, barbed wire, and antipersonnel mines also hindered the division's defensive preparations.[5]

By its own estimate, the 24th Division's combat efficiency rating on 5 August stood at 53 percent. This state of affairs had not gone unnoticed at Eighth Army headquarters, which had initiated a staff study to investigate the feasibility of withdrawing the division from the line. The division's hard service and its losses in men and materiel were duly noted, as was the limited ability of Eighth Army to supply replacements of personnel and vehicles in the immediate future. The staff study recommended replacing the 24th Division with two regiments of the newly arrived 2d Infantry Division on the night of 8—9 August. Eighth Army's G3 section, however, disapproved this recommendation on the grounds that the division could not be spared from the front. The 24th Division would continue in the line, although General Walker remained concerned about the unit's condition. On 6 August, he told a member of MacArthur's staff that its combat value was minuscule and would remain so until the division was rehabilitated. In Walker's opinion, the 24th Division was the most severely depleted unit in Eighth Army.[6]

Of the division's three regiments, the 34th Infantry was undoubtedly the weakest, numbering only 1,402 officers and men on 5 August. With serious shortages of vehicles, 4.2-inch mortars, and BARs, the regiment had a combat effectiveness rating of 40 percent. Commanding the 34th was Col. Charles E. Beauchamp, a West Point graduate who had arrived from Japan

on 16 July just in time to lead the unit in the fight at Taejon. Beauchamp was the regiment's fifth commander in three months. None had had time to correct the deficiencies in training and officer proficiency visible in the regiment even before it was committed to Korea. According to Beauchamp, the 34th had been rated the least effective of any of the regiments occupying Japan. Its performance in Korea had reflected that appraisal, with failures at Ch'onan, Kum River, Taejon, and Koch'ang. In the opinion of historian Roy Appleman, the 34th Infantry was the "worst [regiment] of the three in the division."[7]

As the first unit to withdraw behind the Naktong, the 34th Infantry came to occupy the southernmost portion of the division sector. Although U.S. Army doctrine for defense on a wide frontage called for a full-strength regiment to cover no more than 10,000 yards, the 34th Infantry's zone stretched 20,000 yards up the Naktong from the mouth of the Nam. Behind the front, the 34th was responsible for the security of a bridge over the Naktong that led into the 25th Division's sector at Namji-ri. Accounting for much of the 34th's frontage was a prominent bulge in the center of the regimental line where the Naktong made a wide loop to the west before resuming its southward course. The resulting salient, approximately 5,000 yards deep and 6,000 yards wide at the base, would come to be known as the Naktong Bulge. Four ferry sites studded the salient, one on each side of the base and two near the nose (see map 4).

With only two battalions available, Colonel Beauchamp assigned the frontline positions to Lt. Col. Gines Perez' 3d Battalion. Perez, who had just arrived from the United States, chose Companies I and K to hold the flanks of the regimental position, with frontages of 5,000 and 7,500 yards respectively. He ordered Company L to occupy the salient in the center, which extended for a total of 11,500 yards. Since his battalion numbered only 493 officers and men on 5 August, Perez could do no more than establish a series of platoon-size strongpoints on the hills overlooking the river. Built around each company's four machine guns, the strongpoints generally covered those ferry sites that provided an avenue of approach to the regimental rear via roads or trails.

Directly supporting Perez were several additional units. The regimental intelligence and reconnaissance platoon occupied observation posts on two hills to the left of Company L's position. The regimental heavy mortar company emplaced four of its seven 4.2-inch tubes in a valley at the base of the salient, near the battalion command post in the village of Kogono-ni, and sited the remainder 2,000 yards northward in the same valley. Part of Battery A, 26th Antiaircraft Artillery (AW) Battalion, reinforced Company I as infantrymen. The battery's four remaining half-track-mounted quadruple antiaircraft machine guns functioned as a mobile reserve. On the road to Yongsan, four miles behind Perez' command post, Colonel Beauchamp established the 515 officers and men of Lt. Col. Harold B. Ayres' 1st Battalion, 34th Infantry, as regimental reserve. Three miles nearer the front, the five 105-mm howitzers of Battery B, 13th Field Artillery Battalion, operated in direct support of the 34th Infantry. Nearby, the 155-mm howitzers

of Battery B, 11th Field Artillery Battalion, reinforced the fires of the 13th. Finally, Company D, 3d Engineer (Combat) Battalion, was assigned to the regiment with orders to prepare minefields and serve as a potential reserve.

From his headquarters near Yongsan, Colonel Beauchamp supervised the 34th Infantry's defensive preparations that had begun late on 2 August. During the next three days, the 3d Battalion strengthened its frontline positions, established a chain of observation posts, and sent nightly patrols along the east bank of the river. Fords were available, but because of a lack of boats, no patrols crossed the river in the 3d Battalion sector. Several miles in the rear, the 1st Battalion prepared counterattack plans and surveyed the road net behind the front. Company D, 3d Engineers, laid a limited quantity of antipersonnel mines along the river in front of K Company and improved the roads in the regimental sector. The artillery batteries established observation posts, registered their tubes, and developed fire plans to support the infantry defense. Throughout the regiment, units received limited quantities of new equipment as it became available.[8]

Extending the division's line northward beyond the 34th Infantry was Col. Richard W. Stephens' 21st Infantry. Stephens held a much narrower front than Beauchamp, just under 12,000 yards, probably because his sector contained the Ch'ogye-Ch'angnyong road, as well as the division headquarters eight miles in the rear at Ch'angnyong. The ruins of the Ch'ogye-Ch'angnyong bridge were in the center of the regiment's front, and two ferry sites were located upstream on Stephens' right. Fortunately, Stephens did not have to contend with any major salients in his line since the Naktong curved only gradually from northwest to north along his front. The 21st Infantry numbered 1,670 officers and men on 5 August, but Stephens was unable to deploy that many since Company C and a section of 81-mm mortars were still at Yongdok on Korea's east coast. Lt. Col. Charles B. Smith's 1st Battalion consisted of 540 men, while Maj. John McConnell's 3d Battalion was only a shadow of its former self with 360 men.

Although Companies I and L of McConnell's command were so depleted that they were attached to Companies K and M respectively, Stephens assigned the 3d Battalion to defend the river line. In order to maintain a three-company front, McConnell received part of the regimental Heavy Mortar Company, which was serving temporarily as a rifle company due to the severe shortage of 4.2-inch mortar ammunition. With a smaller area to defend than Perez, McConnell was able to deploy his platoons with interlocking fields of fire. From north to south, the front line was held by Companies M, K, and Heavy Mortar. Reinforcing the position were seven .50-caliber machine guns and crews from the 14th Engineer (C) Battalion, whose 472 men were attached to the 21st Infantry. Additional fire support came from five 60-mm, two 81-mm, and six 4.2-inch mortars emplaced just behind the rifle positions.

Bolstering McConnell, as regimental reserve, was Smith's 1st Battalion. Since Company C was absent, Stephens attached Company D, 14th Engineers, to Smith, who placed it and his own A and B Companies in separate

reserve positions several thousand yards behind the 3d Battalion. From there, they could rapidly reinforce any threatened points in the regimental sector. Battery B, 52d Field Artillery Battalion, and Battery B, 63d Field Artillery Battalion, provided 105-mm artillery support for the regiment from positions 3,000 yards behind Smith's battalion. Companies A and B of the 14th Engineers established their camps near Ch'angnyong, from which they could also serve as a mobile reserve.

Like the 34th Infantry to the south, the 21st Infantry spent the period 3—5 August in strengthening its positions along the Naktong. With more engineer assets than the other regiments, the 21st was better able to protect its front with obstacles. Although antipersonnel mines and trip flares were scarce, a few were planted at likely crossing points. These were supplemented by numerous booby traps improvised from TNT, tin cans, nails, gas drums, and artillery shells. Just as in the 34th's sector, no boats were initially available for patrols to use in crossing the river at night. By the afternoon of 5 August, Colonel Stephens, unsatisfied with this situation, had located several boats in the hands of the 14th Engineers. As a result, the 3d Battalion was directed to send patrols across the Naktong after dark.[9]

North of the 21st Infantry was a 30,000-yard sector held by the 17th Infantry of the ROK Army. Commanded by Col. Kim Hi Chun, the 17th was widely known among American commanders as a highly competent, aggressive unit. In early August, it numbered approximately 2,000 men, organized in three battalions. The 17th's artillery support, like that accorded the division's other regiments, was weak, comprising only Battery A, 13th Field Artillery Battalion (105-mm howitzers), and Battery A, 11th Field Artillery Battalion (155-mm howitzers). To assist in the construction of defensive barriers, Company B, 3d Engineers, moved into the regimental sector, while the two companies of the 14th Engineers near Ch'angnyong were available for additional support if necessary.[10]

Division reserve for the 24th Division was Col. Ned D. Moore's 19th Infantry. This regiment, 1,910 strong on 5 August, had been the last to arrive in the division area, closing at 2030 on 4 August. Moore's men immediately went into bivouac—Lt. Col. Robert L. Rhea's 1st Battalion two miles northwest of Ch'angnyong and Lt. Col. Thomas M. McGrail's 2d Battalion four miles south of the town. Badly depleted in weapons and equipment, the regiment spent much of the next day compiling shortage lists and reequipping itself with the limited quantities of materiel reaching division supply depots. Elements of the regiment conducted road reconnaissance throughout the division sector to accumulate information necessary for the preparation of counterattack plans. Since the 19th Infantry was seriously deficient in vehicles, the 24th Quartermaster Company assigned twenty 2 1/2-ton trucks to the regiment to enhance its mobility.[11]

For purposes of counterattack, several other units were grouped with the 19th Infantry in division reserve. Companies A and C, 3d Engineers, retained their primary mission of maintaining roads in the division rear, but they were also alerted to serve as part of a counterattack force if needed.

Similarly, the 24th Reconnaissance Company at Ch'angnyong provided security to division headquarters, but it also figured in the 19th Infantry's counterattack plans. Unfortunately, the company had already lost ten jeeps and two of its M-24 light tanks, while two of the five remaining tanks had inoperable main guns. In even worse condition, but also committed to the mobile reserve, was Company A, 78th Heavy Tank Battalion. That unit retained only two M-24 tanks as its entire armor strength, and one of those was attached to the 24th Reconnaissance Company. Company A, therefore, began classes in infantry tactics in its camp at Pugong-ni behind the division's left flank. Finally, the 24th Division's headquarters staff, headquarters company, signal company, and medical section established composite defense platoons for either a "last stand defense" or duty as part of the division counterattack force, in case of an enemy breakthrough along the Naktong.[12]

Behind the frontline and reserve units, the administrative and logistic apparatus required to support an American division slowly established itself. On 2 August, the division's rear echelon began its move from Masan northward to Miryang, a distance of thirty miles. Miryang lay approximately twenty-five miles east of Ch'angnyong via either of two circuitous routes through mountainous terrain. Arriving at Miryang on 3 August, most of the various support units opened for business on the following day. An important exception was the division ammunition supply point (ASP), which would not open at Yuchon, seven miles north of Miryang, for several days. Prior to that time, the 24th Division continued to draw ammunition from its old ASP at Masan, an awkward process that exacerbated the existing ammunition shortage. In other respects, the 24th Division's lines of communication and supply were functioning adequately by 5 August (see map 3).[13]

With his division at last in position along the Naktong, General John Church awaited the inevitable North Korean attack. Well aware of his limited resources, Church had created a defensive scheme that relied upon counterattacks by strong reserves to destroy penetrations of his lightly held front lines. Within that general defensive framework, the division commander had chosen to concentrate much of his strength on his center and right. In Church's view, the northern sector of his line was harder to defend than the southern, primarily because of its inadequate road net, and he assumed that his North Korean opponent would reach the same conclusion. Acting upon that assumption, Eighth Army's weakest division gave its weakest regiment the responsibility for holding the soon to be famous Naktong Bulge.[14]

Opposing the 24th Division on the Naktong was the 4th Infantry Division of the North Korean People's Army (NKPA). Activated in late 1948, the 4th Division in the summer of 1950 consisted of the 5th, 16th, and 18th Infantry regiments, plus an artillery regiment and antitank, self-propelled gun, engineer, signal, medical, and training battalions. Each infantry regiment had three battalions, while the artillery regiment had a battalion of 122-mm howitzers and two battalions of 76-mm guns. The division's basic triangular organization strongly resembled that of an American infantry division, except for its smaller artillery contingent and its much reduced

logistical apparatus. The division's authorized strength was 10,381 officers and men, with most of its fighting power concentrated in the 2,590-man infantry regiments (see figure 2).

Commanded by Maj. Gen. Lee Kwon Mu, a veteran of the Chinese Communist Forces and former NKPA chief of staff, the division had played a major role in the capture of the South Korean capital. Its success in that campaign had won it the title of "Seoul Division." Continuing southward, the 4th Division had rolled over Task Force Smith in early July, and it had been pushing the U.S. 24th Division backward ever since. In exchange for the ground gained, however, the 4th Division had suffered severely. By the time it reached the Naktong, its strength was estimated by the Eighth Army Intelligence Section to be no more than 8,000 men, and its artillery component had been reduced to only twelve guns. Nevertheless, the 4th Division still held the initiative and began immediate preparations to launch an assault across the river.[15]

After withdrawing behind the Naktong, the 24th Division briefly lost contact with the North Korean formations opposing it. Information regarding enemy units in its front on 3 August came only from aerial reconnaissance and an occasional message from South Korean police. These sources reported small enemy troop and vehicle movements several miles west of the Naktong, which indicated a deliberate approach to the river. Division intelligence officers developed five possible options they believed to be within North Korean capabilities, ranging from attacks in specific sectors to nothing more than the continuation of the buildup just beginning. In light of the limited activity along the river, the division intelligence section considered the last course of action to be the most likely.

The following day brought a higher level of North Korean activity in the immediate vicinity of the Naktong. Although no American soldiers visited the west bank of the river, two separate North Korean patrols crossed the Naktong near the right flank of the 21st Infantry early on the morning of 4 August. Both patrols retreated quickly, one after being fired upon by elements of the 17th ROK Regiment. Later that day, small groups of North Korean soldiers were seen near the west bank of the river at the juncture of the 21st and 17th ROK Regiment's sectors and in the 34th Infantry's sector at the nose of the salient. In order to discover the extent of enemy activity beyond the range of its own observation posts, the division requested aerial reconnaissance of the area from the river westward for twelve to fifteen miles. Although aircraft struck several villages and claimed hundreds of enemy casualties, this method produced little new information. The division G2, therefore, did not significantly revise his forecast of probable enemy intentions.

Dawn on 5 August brought further increases in North Korean activity along the Naktong. Reconnaissance pilots, artillery forward observers, and infantry observation posts all reported groups of enemy soldiers moving in the area just behind the Naktong's west bank. The greatest concentration of observed enemy movements was in the sector held by the 17th ROK

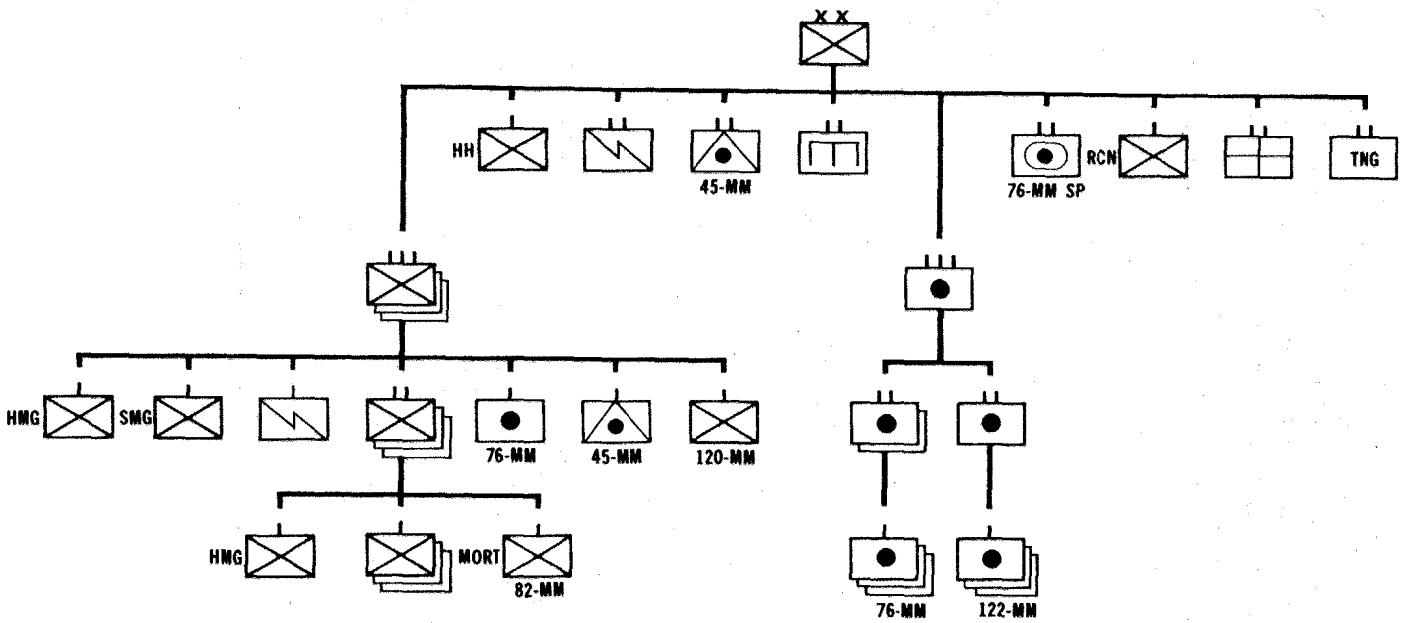


Figure 2. Typical North Korean infantry division (Far East Command—Research Supplement, 19 October 1950)

Regiment, with somewhat fewer incidents reported by the 21st Infantry, and fewer still by the 34th Infantry. Ominously, the 34th reported sighting enemy trucks just across the river. These were shelled by artillery, with limited results reported. Air support for the 24th Division remained at the same level as on the previous two days, with several strikes being made beyond the Naktong along the division's front. Unaccountably, the results of the strikes were not communicated to the division. No change was made in the division intelligence estimate submitted at 1800, which continued to view an enemy buildup as more likely than a crossing. If a crossing should occur, the 34th Infantry sector was considered a more likely site than that of the 21st, but even this possibility rated no higher than third in a list of five. In view of this analysis, Church made no change in the disposition of his units.

Unlike previous nights, which had been relatively quiet, the evening of 5 August saw little diminution in the level of enemy activity that had characterized the daylight hours. On the left flank of the division line, just before sunset, observers from the 34th Infantry saw a group of people stacking boxes in trees near the river. Several hours later, flares appeared in the hills to the west. Outposts on the right of the 21st Infantry line heard vehicles moving eastward toward the river at 2210 and reported seeing large numbers of men moving in the same direction at 2245. While the 34th Infantry sent no patrols across the river, the 21st Infantry placed a patrol on the western shore near midnight. Landing near the sector boundary shared with the 34th, the men heard vehicles moving near the river and the sounds of enemy personnel in a nearby village. Upon recrossing the river, the patrol requested an artillery concentration on the village, which was delivered with unknown results.[16]

The events of the evening of 5 August notwithstanding, no particular sense of alarm was felt within the 24th Division. Battered by the pounding it had received during its long retreat, the division badly needed a respite from heavy combat in order to regain its strength. The line of the Naktong appeared to offer just such a reprieve by providing a barrier to the continuation of the North Koreans' advance. As long as the North Koreans did not attempt a crossing, the presence of a watery barrier separating them from the enemy lulled the men of the 24th Division into a false sense of security.

# The Battle of the Naktong Bulge Begins

3

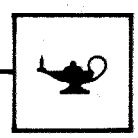

At 0001 on 6 August, red and yellow flares burst luridly over the Naktong. A few minutes later, the 34th Infantry's Observation Post (OP) No. 1 on the south side of the Bulge reported small arms fire in its immediate front. This apparently was a North Korean attempt to divert attention from the opposite side of the salient, where several battalions of the 16th North Korean Regiment were beginning to cross the Naktong. Large numbers of the enemy used rafts, constructed earlier in the hills bordering the river, while others simply waded across. Although a few drowned, most arrived safely on the east bank. There they came under scattered fire from elements of L Company's outpost line, which caused them to move northward along the river bank before entering the hills. The initial contact, which occurred around 0115, ended almost immediately as the North Koreans disappeared in the darkness.[1]

By 0200, enough scattered contacts had developed to indicate that an enemy penetration of unknown strength was occurring on the right center of L Company, near its sector boundary with I Company. Artillery batteries in the regimental rear were warned to watch for infiltrators. At 0205, increased firing on the right caused the 34th Infantry's S3 to notify division headquarters that in his opinion an attack had begun. Solid information on enemy strength and positions was still lacking, however, so little further action was taken. Left to themselves, the North Koreans already across the Naktong continued to move eastward through the hills, while others crossed the river to join them. Around 0300, their leading elements reached the vicinity of the village of Kogono-ni, which lay in a valley traversing the base of the salient. Located just off the road to Yongsan and the regimental rear, the village was the site of the 3d Battalion command post (CP) and a detachment of the Heavy Mortar Company. Overrunning the area, the North Koreans forced Lieutenant Colonel Perez, his command group, and the mortarmen to withdraw eastward in haste (see map 4).[2]

Around 0330, Perez arrived at Lieutenant Colonel Ayres' 1st Battalion, which was in reserve near Kang-ni four miles to the rear. Perez burst into Ayres' CP and informed him of what had happened at the river. This was Ayres' first indication that anything was wrong. For some reason, Perez' flight was not transmitted to division headquarters at Ch'angnyong. In-

stead, at 0430, the 34th Infantry reported only that from thirty to eighty enemy had crossed the river in the I Company sector and engaged in a brief firefight before disappearing in the darkness. No further information was supplied to the division until 0520, when Colonel Beauchamp reported that the North Koreans had made a crossing in force in the center of the 34th's position. Beauchamp announced he was committing Ayres' 1st Battalion in a counterattack at first light, and he requested an artillery liaison plane to assist in locating the enemy. The division G3 duty officer, in turn, notified his section chief, arranged for the liaison plane, and requested that Eighth Army's Air Operations Center provide air strikes at dawn. By 0545, the 19th, 21st, and 17th (ROK) Regiments, as well as division artillery, had all been alerted.[3]

At Kang-ni, Ayres prepared to move his battalion forward at dawn, which occurred around 0630. He placed Capt. Clyde Akridge's Company C in five trucks with orders to drive toward the river until Ayres stopped them. Companies A and B followed on foot, while Ayres rode ahead of the battalion with a small command group to discover what was happening near the river. By 0700, Ayres was moving—as Beauchamp informed General Church when the latter called with orders to "clear up the situation." Passing en route the position of Battery B, 13th Field Artillery Battalion, Ayres drove to Perez' abandoned CP at Kogono-ni, where he saw no enemy troops. Just as the trucks carrying Company C arrived at Ayres' position, North Koreans hidden in the hills above the village directed a heavy fire

Lt. Col. Harold B. Ayres, Commander, 1st Battalion, 34th Infantry

into the small convoy. Ambushed before they could dismount, Akridge's men sustained several casualties and momentarily became disorganized.

In the face of increasing North Korean fire, Ayres ordered Akridge to assault the high ground with Company C, while he himself directed the fire of the company's 60-mm mortars. Akridge, who had only been with the company a few days, quickly received three wounds, and C Company's attack collapsed under a hail of North Korean bullets. Ayres continued to direct the mortars until his ammunition was exhausted and several mortarmen around him were hit. He then withdrew with his command group and succeeded in escaping without injury, although several of his staff were wounded in the process. Ayres spent the next several hours working his way back to the remainder of the battalion. The remnants of Company C took shelter around a grist mill near the ambush site.[4]

Three miles to the rear, the remainder of the 1st Battalion, accompanied by two quad-.50 half-tracks, marched westward under the supervision of Colonel Beauchamp. At 0830, as they neared the village of Sangnigok, they encountered several platoons of North Koreans, who opened fire on them from the hills west of the road. Between this firefight and the one at Kogono-ni lay Battery B, which could hear the firing but as yet could see no enemy. As a precaution, the battery commander sent twenty men to a nearby ridgetop as a security guard. Fifteen minutes later, the battery of five 105-mm howitzers was attacked by an estimated 200 North Korean troops, who began to rake the gun positions with machine gun and mortar fire. The artillerymen fought back and for a time held their own.[5]

By this time, General Church had become concerned about the extent of the North Korean penetration and the lack of progress that had been made in erasing it. Following a series of reports from the 34th's OP No. 2 that enemy units were in the rear of the Heavy Mortar position in the north end of the Kogono-ni valley, Church decided to reinforce the 34th's sector. At 0835, he notified Beauchamp that one battalion of the 19th Infantry would be committed to assist in counterattacking the penetration. Beauchamp was to "clean out" the area, then return the 19th's battalion to division reserve.[6]

At 0900, Brig. Gen. Pearson Menoher, assistant division commander, reported to Church from the 34th Infantry's sector. According to Menoher, Company C of Ayres' 1st Battalion was in Battery B's position under small-arms fire, while Companies A and B were 1,000 yards to the rear but moving forward. Beauchamp planned to maneuver Ayres' battalion in a southwesterly direction, then to the northwest to eliminate the penetration. Since the enemy was estimated to be in no more than company strength, Menoher believed the 19th Infantry's battalion might not have to move beyond Kang-ni. Unfortunately, conditions at the area of penetration were not as expected. Ayres' battalion was a shambles; Company C was no more than a remnant making a last stand near Kogono-ni; A and B were held up near Sangnigok; and the battalion commander was making his way back through the hills on foot. Battery B had been encircled and was

pinned down by mortar and automatic weapons fire. Near the river, most of L Company had withdrawn about a mile to the southwest and had been cut off by the North Korean thrust. In sum, instead of being under control, the situation was badly deteriorating.[7]

In only one respect was there cause for optimism. North Korean attempts to cross into the undefended sector of the Bulge had slackened markedly under the pressure of air and artillery interdiction of the crossing sites. The first air strike had occurred at 0645, just after sunrise, when four F-80s arrived and strafed suspected crossing points. Fifteen minutes later, four F-51s relieved the jets and continued the search for targets. Thereafter, aircraft appeared over the area at regular intervals throughout the day, attacking enemy boats on the river and small parties of North Koreans moving through the hills. In addition, fighter-bombers made numerous strikes on targets west of the Naktong to impede the enemy buildup. The two artillery batteries in the sector assisted the aircraft as much as possible but were hindered by range limitations and lack of available guns. When Battery B, 13th Field Artillery, became immobilized by enemy fire, the only tubes available in the 34th Infantry sector were the six 155-mm howitzers of Battery B, 11th Field Artillery.[8]

Interdiction of enemy activity in the hills east of the Naktong was not as successful as that in the river valley. Companies A and B of Ayres' 1st Battalion remained stalled near Sangnigok throughout the morning, although supported by fire from two quad-.50 antiaircraft half-tracks. One of these vehicles, however, was damaged by an antitank rifle, and the battalion executive officer, directing the attack in Ayres' absence, was wounded. With Ayres' battalion fragmented, no aid was available for Battery B, which had been encircled since 0900. At 1030, the battery commander concluded that his only hope was to withdraw along a trail to the southeast. Gathering about fifty men, he managed to extricate one howitzer and several trucks before enemy fire forced him to abandon the remaining four guns and numerous vehicles around 1100. By the time the battery reached safety near Yongsan in early afternoon, it had lost two killed, six wounded, and six missing.[9]

At approximately the same time that Battery B escaped, the right flank of the 34th Infantry began to collapse. Although not under direct attack, the men of Company I could hear the firing on their left gradually move toward their rear. Apprehensive, the lieutenant commanding Company I ordered a withdrawal northward into the 21st Infantry's sector. Company I, joined by detachments from the 34th's Heavy Mortar Company, M Company (Weapons), and Battery A, 26th AAA Battalion, crossed into the zone of the 21st Infantry shortly after 1030. This fact was noted by the 21st Infantry's left flank unit—its own Heavy Mortar Company—and reported to regimental headquarters. At 1055, the 21st Infantry passed this information on to division, which had been unaware of Company I's retreat. A few minutes later, at 1110, another message from the 21st's Heavy Mortar Company reported North Koreans moving into the positions vacated by the men of Company I (see map 4).

The new information thoroughly alarmed General Church. He ordered Colonel Beauchamp of the 34th Infantry to take all necessary measures to return Company I to its original positions and to relieve the officers responsible for the withdrawal. He authorized Colonel Stephens of the 21st Infantry to direct artillery fire upon the North Koreans now seen to be occupying the hills across the valley from the 21st Infantry positions. This valley was crucial because it contained a road leading directly from the river to the division's command post at Ch'angnyong. With this road potentially open to the enemy, the composite defense platoons at division headquarters hastily manned a perimeter around the town. To block this avenue of approach and reinforce his crumbling front, Church at 1150 dispatched the 24th Reconnaissance (Recon) Company down the road toward the river to assist Company I in restoring the line. By this time, Company I had withdrawn two miles to the vicinity of one of the 21st Infantry's reserve companies, where it reported it had been facing several thousand enemy troops.[10]

In addition to committing the 24th Recon Company, Church also allocated part of the 19th Infantry to bolster the 34th. Alerted at 0600 and ordered to Beauchamp's support at 0835, the 2d Battalion of the 19th moved by truck at 1000 from its camp on the Ch'angnyong-Yongsan road. It reached its assembly area at Yu-ri, five miles away, around 1100. Ten minutes later, Church directed Col. Ned Moore of the 19th Infantry to "get up there and clean out the enemy. I'll send your other battalion to you." At the same time, he ordered Moore's 1st Battalion to leave its position northwest of Ch'angnyong and follow the rest of the regiment to Yu-ri. Although it moved by truck, the 1st Battalion required approximately two hours to travel the eleven miles to its destination.[11]

By early afternoon, Lieutenant Colonel Ayres had managed to rejoin Companies A and B of his battalion, which were still stalled at Sangnigok. After adjusting mortar fire on suspected enemy positions, Ayres ordered the advance to resume. Company B assaulted a series of low hills to the right of the road, while Company A deployed in the rice paddies on the left. Although the men in the hills found the going difficult, Capt. A. F. Alfonso's Company A eventually worked its way forward to the abandoned gun positions of Battery B. Supported by the remaining quad-.50 half-track, Company A deployed forward of the battery position, while a detail searched for survivors of the morning's action. Satisfied that he had recovered everyone left behind, Alfonso pressed forward with his men into the valley Company C had entered earlier in the day. There he found thirty-five of Akridge's men making a final stand in a small grist mill. North Koreans had approached within grenade range of the mill but had not been able to overrun it. Gathering up the dead and wounded they could find, Alfonso's men loaded them into abandoned trucks and sent them to the rear, escorted by the half-track and several riflemen. By the time Company A resumed its advance toward the Naktong, it was late in the afternoon. Company B was unable to join it, having been halted by enemy resistance in the hills north of the abandoned artillery position.

While Alfonso's Company A cautiously proceeded down the road to the river, men of Battery B returned to their former position and removed two more howitzers and trucks before being driven off by sniper fire from the hills. Ahead of them, Company A soon encountered strong enemy resistance. Halting his column, Alfonso suppressed the North Korean fire with several rounds from a 60-mm mortar, then ordered his men forward. The riflemen fired left and right as they moved down the valley toward the Naktong. Just after sunset, Company A reached the river, where it found elements of Company L, which had withdrawn earlier in the day from their original positions at the nose of the salient. Because the combined force numbered only about ninety men and the enemy had closed in behind them, Alfonso decided to establish a defensive position there. He opened communications with Ayres by radio relay through Company B two miles in the rear. Designated force commander by Ayres, Alfonso then requested an airdrop of food, water, ammunition, and medical supplies for his beleaguered troops (see map 5).[12]

Behind Ayres' battalion, Lt. Col. Thomas McGrail's 2d Battalion, 19th Infantry, had moved to a line of departure northeast of Sangnigok by 1500. Approximately one hour later, it began to advance slowly in a northwesterly direction in order to seal off the southern half of the area vacated by Company I of the 34th Infantry. The plan of maneuver called for the battalion to seize Hill 146, about a mile west of Sangnigok, then to turn north to another ridge a mile from the first, and finally to assault westward one-half mile to the hills overlooking the Naktong. Given the heat of a Korean August and the rough terrain, McGrail's assignment was ambitious at best. Enemy resistance, though slight, further delayed the advance. Meanwhile, Colonel Moore held Lieutenant Colonel Rhea's 1st Battalion, 19th Infantry, in reserve until McGrail's advance clarified the situation.[13]

While the 19th Infantry attempted to regain the southern half of I Company's original position, the 24th Recon Company attempted to regain the northern half. Organizing its cooks and mechanics into an extra platoon, the 24th Recon Company departed Ch'angnyong just before noon. Meeting no enemy resistance, the leading elements of the company reached the river around 1300. After contacting Company I, the recon company commander drew up a plan to recapture the lost defensive positions on the hills overlooking the river. Reinforced by the recon company's rifle squads and supported by the fire of its light tanks, Company I launched a counterattack around 1500. The first hill was gained easily, but once on the reverse slope, the infantrymen came under heavy fire from automatic weapons and mortars located on the next hill to the south. Covered by an artillery barrage, Company I withdrew once more, all the way to the position of the supporting tanks. Although men of the company claimed they had been surrounded by up to 4,000 North Koreans, the commander of the 21st Infantry's Heavy Mortar Company, who was observing from a hill to the north, estimated that the enemy force numbered no more than 150 men. Concluding that Company I was useless for further offensive action that day, the commander of the 24th Recon Company moved both units to high ground near the road and established defensive positions for the night.[14]

In the southern half of Company I's old position, the 19th Infantry was somewhat more successful than other counterattacking elements had been. Finally committed to attack northwest from the vicinity of Sangnigok in late afternoon, McGrail's 2d Battalion reached its first objective, Hill 146, by 1715. Leaving F Company on Hill 146, McGrail turned the remainder of the battalion northward toward his second objective, Hill 174. Reaching that hill with E and G Companies by 1900, he estimated that 300 North Koreans were caught in the village of Ch'ongdan, between Hills 146 and 174. Believing his force to be too weak to assault the village, McGrail directed heavy mortar and automatic weapons fire on the enemy position until darkness prevented further action. The North Koreans, who probably numbered far fewer than 300 men, then withdrew unhindered, while their destruction was reported to the 24th Division.

Although Rhea's 1st Battalion had been available to him since 1300, Colonel Moore did not commit it to action until 1800. The original plan of attack called for Rhea to follow McGrail to Hill 146, then wheel southward and sweep through the Naktong Bulge. With only three hours of daylight remaining, this proved impossible to accomplish, thus dashing General Church's hopes of restoring the river line by dark. Rhea moved westward with Company C on the left, B on the right, and A in reserve. Part of Company B reached Hill 146 without difficulty, but its 2d Platoon came under fire from Hill 165 to the south. Company C also encountered fire from Hill 165, causing the unit to recoil. As night approached, Rhea consolidated all of his companies in the vicinity of Hill 146, established communications with the 2d Battalion to the north, B Company, 34th Infantry, to the south, and waited for daylight. Thus ended the final counterattack of the day in the 34th Infantry sector.[15]

The North Korean penetration in the 34th Infantry zone was not the only problem for General Church as darkness fell on August 6. North Korean units had crossed the Naktong in the sectors guarded by the 21st Infantry and the 17th ROK Regiment. An estimated two squads of North Koreans had crossed in boats on the left of the ROK sector just before dawn, but the battalion commander had quickly committed his reserve company and the penetration had been contained. Unfortunately, Eighth Army had decided to withdraw the 17th ROK Regiment from 24th Division control as part of a general reorganization of South Korean forces. The regiment had been scheduled to depart on the morning of 6 August, but the crisis in Church's sector caused Eighth Army to delay the movement for twenty-four hours. To replace the South Koreans, Church created Task Force Hyzer from three companies of the 3d Engineer (Combat) Battalion, Company A of the 78th Heavy Tank Battalion (less tanks), and, ultimately, the 24th Reconnaissance Company.[16]

In the 21st Infantry's sector, an action resulting from another enemy crossing remained unresolved at nightfall. At 1000 on the morning of 6 August, a detachment of South Korean police went to the village of Sadung to evacuate any civilians who might remain. Located on the Naktong floodplain below the hills occupied by Companies M and K, the partially de-

stroyed village contained few civilians but proved to be full of North Korean soldiers who had crossed the river secretly during the night. The police were driven from the village by the North Koreans, who then fired on a nearby squad of Company K. In the absence of Major McConnell, the battalion commander, his executive officer called for mortar and machine gun fire to be placed on the village, but communications problems delayed transmission of the order. As the afternoon passed, more North Koreans attempted to join their comrades in Sadung by floating their equipment across the river on small rafts. Several were killed by fire from the hills, but others arrived safely and disappeared into the village.

By midafternoon, artillery had finally been brought to bear on Sadung, but with little effect. At 1620, McConnell reported that K Company's right flank squad was being driven back by at least fifty North Koreans from Sadung. In hopes of eradicating the penetration before nightfall, Colonel Stephens, at 1630, ordered Lieutenant Colonel Smith to drive the enemy from Sadung. Although counterattack plans had been prepared earlier for just such a contingency, it was several hours before Smith's Company A was in position to attack. Meanwhile, North Koreans in Sadung began to infiltrate eastward through a draw leading into the rear of M Company. Artillery concentrations were the only force available to suppress North Korean activity until 1900, when Company A's counterattack finally began. A South Korean policeman captured earlier in the day managed to escape during one of the barrages, and he reported at least 150 North Koreans in the village. In spite of heavy enemy fire and communications difficulties with its own supporting artillery, Company A drove the North Koreans back into Sadung but could go no farther. As darkness covered the valley, the company managed to secure a toehold in the north end of the village and held it throughout the night (for location of Sadung, see map 3).[17]

General Church had wanted the enemy penetrations destroyed by nightfall, because failure to do so would allow the North Korean 4th Division an opportunity to reinforce the estimated two battalions of its 16th Regiment already east of the Naktong. With the results of his counterattacks in hand, Church knew that the river line could not be restored that night, and he regretfully informed General Walker of that fact at 2130. Enemy activity in the 17th ROK and 21st Infantry sectors, although worrisome, was sufficiently localized to cause little concern. In contrast, the North Korean advance to the base of the salient in the 34th Infantry sector was potentially quite serious. There, at least 12,000 yards of river frontage lay open to enemy exploitation under cover of darkness. Recognizing that the enemy would probably seek to expand his foothold east of the Naktong, Church outlined his own plan for the next day in Operations Instructions No. 18. The 19th and 34th Infantry regiments were to continue their counterattacks toward the river, while the 21st Infantry defended its sector and Task Force Hyzer relieved the 17th ROK Regiment.[18]

An analysis of the first day's action reveals that four major counterattacks were undertaken by elements of the 24th Division. Ayres' counterattack provided the best opportunity to deal with the North Korean penetra-

tion at an early stage, but its strength was diluted by the manner in which it was executed. An experienced combat officer who had served in Italy during World War II, Ayres took a calculated risk by splitting his battalion and sending one company forward in trucks.[19] He thus gained speed—but at the expense of mass. Any advantage conferred by speed was lost when the company was ambushed. Not only was a company virtually destroyed, but Ayres himself was unavailable to control the remainder of his battalion for several precious hours. When he did regain control, one of his two remaining companies was isolated in the enemy rear. Coupled with the disintegration of Perez' 3d Battalion, the fragmentation of Ayres' 1st Battalion ensured the future ineffectiveness of the 34th Infantry.

On the 34th's northern flank, the unauthorized withdrawal of Company I and attached elements opened an even larger avenue into the 24th Division's rear. The response of the 24th Recon Company to this crisis was prompt, but it was limited to the vicinity of the road, because the unit's infantry component was small. The counterattack, therefore, depended largely upon Company I. However, judging from the wildly exaggerated reports of enemy strength emanating from this company, it was too demoralized to recover the lost ground from the small enemy force present. The 24th Recon Company provided as much support as possible, but Company I was no longer an effective unit, and the counterattack failed.

Although slow to begin, the series of counterattacks mounted in late afternoon by the two battalions of the 19th Infantry made some progress in containing the North Korean penetration. Arriving by 1100, the 2d Battalion did not begin its attack until 1600, while the 1st Battalion, which arrived two hours after the 2d, also waited five hours before being committed. Both battalions advanced under a scheme of maneuver that was decidedly optimistic in terms of the tasks to be completed in the few hours remaining before nightfall. Lack of information on enemy dispositions hindered both units as they advanced, especially the 1st Battalion, which was forced to reduce its frontage due to unexpected enemy fire. Neither battalion obtained its ultimate objectives, but the regiment's final position within a mile of the river at least established a firm shoulder on the northern flank of the enemy bridgehead.

The final counterattack of the day was the attempt by the 21st Infantry to deal with the North Koreans occupying Sadung. Once again, much time elapsed between the discovery of the enemy at 1130 and any serious attempts to eliminate their penetration. When initial efforts by K Company proved insufficient to dislodge them, Company A from the regimental reserve was ordered at 1630 to implement a previously prepared counterattack plan. Company A began its assault at 1900 but was hindered by inadequate coordination with supporting artillery batteries. Despite Company A's best efforts, Sadung remained in the hands of the North Koreans at nightfall.

In every case on 6 August, counterattacks by elements of the 24th Division fell far short of expectations. Although General Church and his regimental commanders were aware of the necessity for regaining the river

line before dark, they were unable to attain that goal. In fact, they only began to contain the North Korean thrust on the northern shoulder and made no progress whatsoever on the southern flank. Although rapidity of response is a major factor affecting the success of a counterattack, every counterattack, except Ayres' initial effort, was slow in execution. This was true even when a preexisting counterattack plan was implemented. Unfortunately, the long preparation periods did not produce increased information on enemy dispositions for assault-element commanders. Nor did the extra time result in improved artillery support for the attacking infantry. Because of its limited number of tubes, the artillery played little positive role in the counterattacks and, in at least one case, was responsible for much of the delay. These factors, when combined with the enervating heat, the rugged terrain, and the general condition of the 24th Division, explain its limited success during the first day of battle on the Naktong (see map 5).

During the evening of 6—7 August, combat activity slackened along the river in the 24th Division sector. On the northern flank, enemy troops attempted several small crossings in the zone being evacuated by the 17th ROK Regiment but apparently were dispersed by artillery fire. The 21st Infantry continued its efforts to eject the North Koreans from Sadung but were still thwarted by failure to establish satisfactory communications with supporting artillery. To the south, the 19th Infantry held its ground in the face of enemy probes against Companies B and C in the center of its line. Within the Naktong Bulge itself, fragments of Companies A, C, and L of the 34th Infantry maintained an uneasy vigil from their perimeter along the Naktong, in the enemy's rear.[20]

Disappointed that the North Korean penetration had not been destroyed by his mobile reserve on 6 August, General Church ordered the counterattacks to be resumed on the following day. Yet the 24th Division was now without reserves of its own to throw into the struggle. The 3d Engineer (Combat) Battalion previously had been available for that role, but Eighth Army's order detaching the 17th ROK Regiment from the 24th Division meant that the engineers organized as Task Force Hyzer would have to defend the sector evacuated by the departing South Koreans. As a partial replacement for the ROK unit, Eighth Army gave Church the 1st Battalion of the 9th Infantry and a battery of the 15th Field Artillery Battalion. These units, which had just arrived in Korea as part of the 2d Infantry Division, reached the battlefront on the evening of 6 August. The infantry battalion took a position at Ch'angnyong as division reserve, while the artillery battery established firing positions west of Yongsan to support the 19th Infantry. In the division rear, several ordnance, engineer, and medical detachments from Eighth Army moved into Miryang. These support units would ultimately aid the 24th Division in its fight to hold the Naktong line, but their immediate effect was to complicate the 24th Division's already tenuous supply situation.[21]

The absence of significant reserves on 7 August forced General Church to continue the counterattacks with the units committed on the previous day. Beauchamp's shattered 34th Infantry contributed little to this effort

from its positions in the southern half of the Bulge. Companies A, C, and L, consolidated under the command of Captain Alfonso, held their perimeter on the hills overlooking the river, but increasing North Korean activity in their vicinity prevented them from maneuvering. In early afternoon, they received an airdrop of badly needed food, water, and ammunition. Approximately half of the supplies landed outside their perimeter, and several men were wounded in unauthorized efforts to retrieve the bundles before nightfall. A thousand yards southwest of Alfonso's enclave, Company K continued to hold its original positions along the Naktong against only slight enemy opposition.[22]

With most of his force pinned down, Beauchamp had only two companies available for counterattack. He ordered Company B to leave its position just east of the village of Tugok and to advance along the road leading to Captain Alfonso's perimeter near the river. Understrength and exhausted, Company B attempted to move forward around midmorning, but heavy enemy fire prevented the company from making any appreciable gain. Further attempts proved equally feeble and futile. Company B would do no more that day, leaving only Company I, four miles to the north, to attempt to gain ground for the 34th Infantry. Supported by the light tanks of the 24th Recon Company, Company I, around 1300, reoccupied the northern tip of the hill mass that had represented the regiment's right flank prior to the North Korean attack on 6 August. An hour later, the company made contact with a platoon from Company G of the 19th Infantry as it advanced from the south, and both units established a perimeter for the night (see map 6). That evening the 34th Infantry reported its strength at 1,090 officers and men and its combat effectiveness at only 30 percent.[23]

Church's hopes of eliminating the North Korean penetration before nightfall of 7 August rested primarily on Colonel Moore's 19th Infantry. The regiment's attack plan called for the 1st Battalion to move both west and south in an effort to reestablish a firm shoulder on the river, while reducing the enemy's maneuver space. The 2d Battalion would simultaneously advance toward the west and north, also toward the river, where it would seek a link with Company I, 34th Infantry. These plans represented nothing more than the continuation of the previous day's scheme of maneuver. Company commanders received their attack orders at 0700 with H-hour placed at 0900.

Lieutenant Colonel Rhea's 1st Battalion moved out around 0845. Company B remained on the hill overlooking the village of Sinam-ni to provide a base of fire, while Company C advanced northwest across the valley toward Ohang Hill. Moving in a skirmish line formation, the troops crossed the valley unopposed, but half way up the hill on the far side, they came under fire from North Koreans on the crest. Despite this resistance, Company C continued to advance and ultimately seized the objective. Within ten minutes, about fifty North Koreans counterattacked the hill, but they were repulsed with heavy loss.

Company A of the 1st Battalion was not as lucky as Company C. Ordered to attack due south to seize Hill 165 and two nearby villages, the

company commander formed the 1st Platoon on the right, the 2d Platoon on the left, and the 3d Platoon in support. The 1st Platoon passed along the west side of Hill 165 and after a short but intense firefight occupied a spur projecting from the main hill mass. A message reporting the platoon's success was sent back to the company commander, but he never received it. Meanwhile, the 2d Platoon assaulted the north side of Hill 165. One squad quickly reached the crest but was violently counterattacked by North Koreans entrenched on the reverse slope. Harried by mortar fire, the 2d Platoon withdrew from Hill 165 by 0920. Their situation, in the words of the regimental journal, was "not too good."[24]

North of Rhea's 1st Battalion, Lieutenant Colonel McGrail's 2d Battalion encountered little difficulty in advancing westward to the line of hills overlooking the Naktong. By noon, Company F was in contact with Company C of the 1st Battalion on Ohang Hill. Company E seized the next hill to the north without opposition, although it later received sporadic fire from both American and North Korean sources. Farther northward still, Company G also reached the river, then sent a platoon along the ridge to make contact with Company I, 34th Infantry. The yawning gap created by the latter unit's hasty withdrawal of the previous day had finally been closed, considerably reducing the maneuver space available to the North Koreans (see map 6).

By noon, the advance of the 19th Infantry began to stall. At 1455, a regimental staff officer radioed to division headquarters: "Had to slow down our attack. Lots of heat exhaustion. Men are dropping out like flies. However, it appears that we have them on the run." During the lull, General Church arrived at Colonel Moore's CP. In light of the imminent departure of the 17th ROK Regiment from the division sector, Church initially directed Moore to move the 2d Battalion north by truck to support Task Force Hyzer. Before this order could be executed, however, the division commander rescinded it, and McGrail's men remained on the hills above the Naktong.

At 1700, the unit journal of the 19th Infantry recorded: "Troops suffering from heat exhaustion, lack of rations and water. Too tired to advance." Only after the temperature began to drop as nightfall approached did the advance resume. Companies F and C consolidated their positions on Ohang Hill near the river, while Company A once again assaulted Hill 165. Drawing two squads from his 1st Platoon on the right, the company commander united them with the relatively fresh 3d Platoon and sent the combined force forward. Although delayed briefly by snipers and machine gun fire, the men of Company A seized the crest. With all of his radios malfunctioning, the company commander sent messengers to gather up the remainder of his unit and consolidate it on the hill. By sunset at 2030, Company A believed it was secure for the night.

But Companies A, C, and F were not allowed to enjoy their gains. About an hour after sunset, the North Koreans began a firefight with all three units. Twenty minutes later, at 2150, Company A reported that its positions on Hill 165 had been overrun and that an enemy force of un-

known size was heading toward the 1st Battalion CP. Covered by the 81-mm mortars of the battalion's Weapons Company, Company A withdrew in considerable haste to the northeast. Around 2330, the unit was finally halted and reassembled near the mortar positions adjacent to the 1st Battalion CP. Meanwhile, the North Koreans made a similar attack on Company B, which had remained in position all day on Hill 146. Unlike Company A, this unit successfully withstood the enemy onslaught (see map 6).[25]

Although the efforts of the 34th and 19th Infantry regiments to reduce the Naktong Bulge remained the main focus of his concern, General Church could not completely neglect affairs on the 24th Division's center and right. Items of interest included a small but troublesome North Korean bridgehead in the 21st Infantry's sector and also the gap created by the departure of the 17th ROK Regiment from the division's right flank. Neither situation was as critical as Beauchamp's and Moore's battle to the south, but both remained potentially dangerous.

The problem faced by Colonel Stephens' 21st Infantry on 7 August centered around the village of Sadung, just as it had on the previous day. Company A of Lieutenant Colonel Smith's 1st Battalion had been trying, without success, to eject the North Koreans from Sadung throughout the night of 6—7 August. The company was hindered by stubborn enemy resistance but also by its inability to achieve satisfactory coordination with its supporting artillery. Growing impatient, Smith decided to withdraw Company A at 0430 on 7 August if no further progress had been made by that time. None was achieved, although 155-mm illuminating shells were fired at regular intervals to prevent the North Koreans from reinforcing their troops in the village. Because of communications difficulties, no further artillery support was forthcoming.

In order to cover Company A's disengagement, Smith ordered Company C, 14th Engineers, to move from its reserve position to the high ground overlooking Sadung. Before the engineers could arrive, however, Company A completed its withdrawal under cover of darkness. With friendly forces safely out of the line of fire, Stephens and Smith hoped to destroy the North Koreans remaining in Sadung by a concentrated application of artillery and aerial firepower. Their maddening inability to arrange for observed artillery fire on the village continued throughout the morning, however, due to shortages of both radios and forward observers. Thus, the batteries supporting the 21st Infantry could do no more than fire occasional blind concentrations on Sadung. Nor was air support more effective. The regiment's request for an air strike was denied at 0830 because of the higher priority assigned to the units farther south. Thus, the 21st Infantry would have to solve the problem of Sadung on its own.[26]

In midmorning, a patrol from Company K entered Sadung, where it found bloodstains and enemy equipment but no North Koreans either alive or dead. Shortly after 1100, an air strike was made available to the 21st Infantry, but the disappearance of the enemy from the village made it unnecessary, and the planes were released to other missions. Fifteen minutes

later, North Koreans reappeared in the village, and by 1250, they had infiltrated between Companies K and M and had cut off an observation post. Stung by the enemy's audacity, Colonel Stephens ordered his battalion commanders to resolve the Sadung problem once and for all. A platoon from Maj. John McConnell's 3d Battalion counterattacked to relieve the surrounded OP shortly after 1300, but strong enemy resistance forced Smith to add the weight of Company C, 14th Engineers, before any ground was gained. By 1640, both Sadung and its satellite village had been recaptured, and engineer detachments moved in to mine and booby-trap the area. Fifteen enemy dead were counted.

Nominally a simple operation, the mining of Sadung proceeded with difficulty into the evening. The engineers were first delayed by an infantry lieutenant who ordered them to halt because artillery would be firing on the village later. Once this matter was resolved, the engineers were harassed by North Korean snipers hiding in the grass nearby. Next, artillery fire began to fall upon Sadung, endangering the working parties. Urged on by Colonel Stephens, the engineers hastily finished the job and departed not long after sunset. Behind them, chickens began to set off the demolitions.[27]

Almost immediately after dark, the sounds of truck engines were heard beyond the Naktong, opposite Sadung. At 2230, the 3d Battalion reported that enemy troops in company strength had once more crossed into Sadung and were moving into the draw between Companies K and M. An additional crossing was reported 2,000 yards downstream near the wrecked highway bridge, where booby traps were exploding. The defenders fired artillery concentrations on both locations but with unknown results. Although threatened with encirclement, outposts near Sadung received orders to hold their positions until dawn, when a counterattack would attempt to rescue them. Since the companies of the 14th Engineer (C) Battalion by this time were all engaged in either extending the regimental line northward or providing security for the artillery, only Companies A and B of Smith's 1st Battalion were available for the counterattack. By midnight, both companies had been alerted, and ten trucks were available to move them forward at dawn.[28]

Units available for counterattack missions were limited in the northern half of the 24th Division's zone because of a series of unit and boundary changes imposed upon the division by Eighth Army. Early on the morning of 7 August, three companies of Lt. Col. Peter C. Hyzer's 3d Engineer (C) Battalion relieved the 17th ROK Regiment from its positions along the Naktong. The departure of the South Korean regiment at 1600 left the 3d Engineers to guard a river frontage of approximately 29,000 yards. To reinforce Hyzer's three available companies, General Church detached the battalion's Company D from the 34th Infantry and the 24th Recon Company from its position guarding the Ch'angnyong-Naktong road, sending both of them to join the 3d Engineers. Collectively, all of these units were now known as Task Force Hyzer. At the same time, Church detached Company A, 78th Heavy Tank Battalion, from Hyzer's control and dispatched it to support Beauchamp's 34th Infantry. The tankers were currently serving as infantry,

since their two remaining tanks had already been assigned to support Moore's 19th Infantry.[29]

Fortunately for Task Force Hyzer, the North Koreans made no serious attempt to force a crossing in the engineers' sector during the relief of the 17th ROK Regiment. North Korean guerrillas and infiltrators were active, however, in the task force's rear areas, where one group battled South Korean police and another harassed Battery A, 11th Field Artillery Battalion. As 7 August closed, Colonel Hyzer's area of responsibility contracted as Eighth Army reduced the task force's frontage by some 20,000 yards. The ground relinquished was to be covered by units of the 1st Cavalry Division, which would extend southward into the gap. To aid Hyzer further, the 21st Infantry extended its frontage several thousand yards northward by moving Company C, 14th Engineers, from its reserve position into line (for the 17th ROK sector, see map 3).[30]

The end of the 24th Division's second day of battle along the Naktong provided General Church with some grounds for optimism. Although his goal of eliminating the North Korean penetration had not been achieved, the river frontage available to the enemy for exploitation had been markedly reduced by the counterattack of the 19th Infantry. Equally positive, the North Koreans had not significantly reinforced their troops within the Naktong Bulge during the night of 6—7 August. Small groups had crossed the river during daylight on 7 August, but their numbers were minimal. Nevertheless, Church's intelligence section recognized that the North Koreans remained able to reinforce their forward elements east of the Naktong, and they forecast just such an effort during the night.[31]

On the negative side of the ledger, the 24th Division continued to be stretched thin. Division strength, including attached units, totaled 11,441 officers and men on 7 August. Combat efficiency stood at no more than 46 percent. With every combat unit of the division either in line or in direct support, security of the division headquarters complex at Ch'angnyong remained in the hands of composite defense platoons drawn from service units and staff sections. Throughout the day, the division's only reserve was the 1st Battalion, 9th Infantry, of the 2d Infantry Division. At 2215, Eighth Army ordered the remainder of the 9th Infantry (less its 3d Battalion) to move to Ch'angnyong, where it would come under the operational control of the 24th Division. In addition, the 27th Infantry of the 25th Infantry Division, located to the south, was alerted for possible duty in the 24th Division's zone. With no other reserves available to him, General Church hoped his own forces would suffice to drive the North Koreans back across the Naktong River.[32]